MAPX	MODIFICATION	DATE

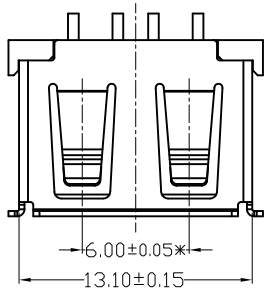

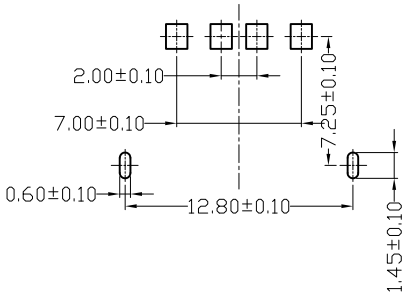

FRONT EDGE OF CONNECTOR
PCB LAYOUT

NOTES:
1. HOUSING: SEE NOTES,
TERMINAL: SEE NOTES.
SHELL: SEE NOTES.

SPECIFICATION:
1. ELECTRICAL CHARACTERISTIC:
CONTACT RESISTANCE: 30MΩ MAX
DIELECTRIC WITHSTANDING VOLTAGE: 500V AC FOR 1MIN
INSULATION RESISTANCE: 1000MΩ MIN
2. MECHANICAL CHARACTERISTIC:
INSERTION FORCE: 35N(3.57KGF) MAX
EXTRACTION FORCE: 10~35N(1.02~3.57KGF)MIN
DURABILITY: 1500 CYCLES EXTRACTION FORCE:10~35N
3000 CYCLES MIN
5000 CYCLES EXTRACTION FORCE:3~35N
3. ENVIRONMENTAL:
OPERATING TEMPERATURE: -55℃+85℃
4. Contact finish:
01:Selective Gold Flash
02:Selective Gold 3U"
03:Selective Gold 5U"
04:Selective Gold 15U"
05:Selective Gold 30U"

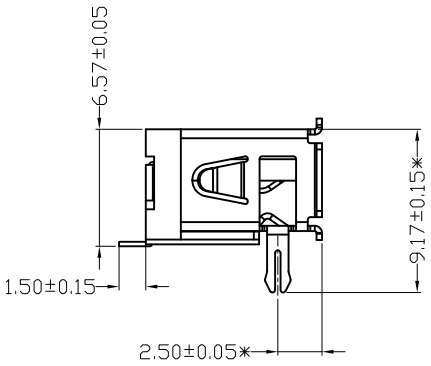

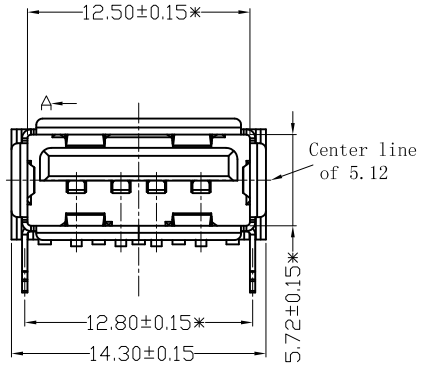

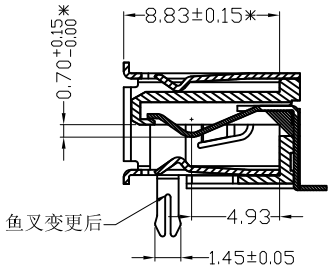

SECTION A-A

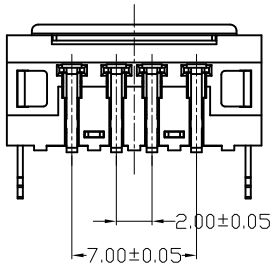

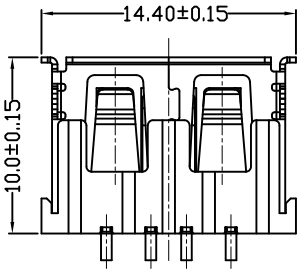

产品图 PRODUCT CHART DWG									
公差一览表 TOLERANCE UNLESS OTHERMSE				单位 UNITS	MM	制图 DRAWING	Z-Y-B	制图料号 PRODUCT PART NO.	
X.	±0.25	X.	±5.°						
.X	±0.20	.X	±2.°	比例 SCALE	1:1	审核 CHKD		产品名称 PRODUCT NO.	C42511
.XX	±0.15	.XX	±1.°						
.XXX	±0.10	.XXX	±0.5°	日期 DATE	2015.01.10	核准 APPD		角法 VIEW	版本 VER A0