REV	MODIFICATION	DATE
A0	胶芯变更	2013.12.20

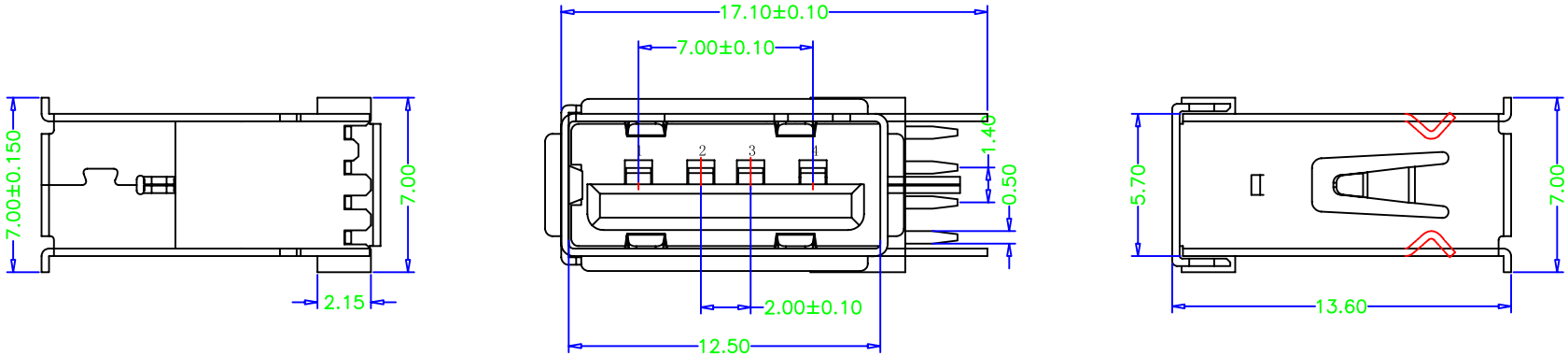

NOTE:
1. Material:
   Housing: Thermoplastics,UL94V-0(ROHS,HF)
   Contact: Phosphor Bronze C5191-EH/C2680-EH, T=0.25mm
   Shell: COPPER ALLOY T=0.30mm
2. FINISH:
   Contact: 15u″ Gold Plated on Contact Area,
   80u″ Min.Tin Plated on Solder Area
   50u″ Min.Nickel Underplating Over All.
   Shell: 50u″ Min.Nickel Underplating Over All.
3. Specification:
   3.1: Rating:
   Rated voltage 500V AC/DC. Rated current: 2 A Max.
   3.2: Electrical:
   Insulation Resistance(EIA-364-21):
   1000MΩ Min. at 500V/DC for 1Minute.
   Contact Resistance(EIA-364-23):
   30 mΩ Max. at 20mV Max, 50mA
   Dielectric Withstanding Voltage(EIA-364-20):
   No discharge, flashover or breakdown at 500V/AC 1Minute
4. Plug extraction force shall be between 1.0kgf and 2.00kgf
5. Contact finish:
   01:Selective Gold Flash
   02:Selective Gold 3U″
   03:Selective Gold 5U″
   04:Selective Gold 15U″
   05:Selective Gold 30U″

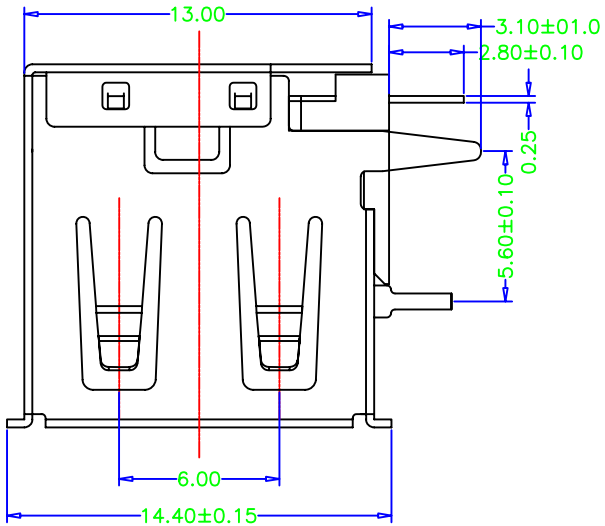

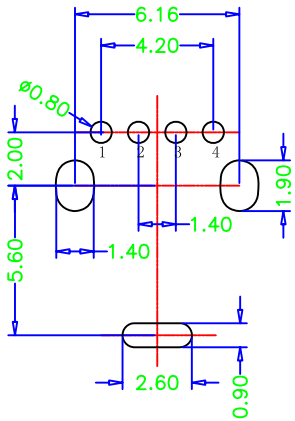

RECOMMENDED PCB LAYOUT
GENERAL TOLERANCES:±0.05

产品图 PRODUCT CHART DWG									
公差一览表 TOLERANCE UNLESS OTHERMSE				单位 UNITS	MM	制图 DRAWING	Z-Y-B	制图料号 PRODUCT PART NO.	
X	±0.25	X	±5.°	比例 SCALE	1:1	审核 CHKD		产品名称 PRODUCT NO.	USB A/F侧立短体4PIN Y型脚有卷边 (直脚 L=13.6)
.X	±0.20	.X	±2.°	日期 DATE	2013.12.20	核准 APPD		角法 VIEW	版本 REV: A0
.XX	±0.15	.XX	±1.°						
.XXX	±0.10	.XXX	±0.5°						