REV.	ECN NO.	DESCRIPTION	DRAW	CHECK	APPD.	DATE
A3	ECN150321001	增加规格	Amanda	—	—	2015.03.21
A4	ECN150626002	增加规格	Amanda			2015.06.26

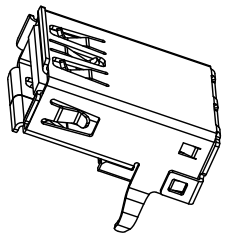

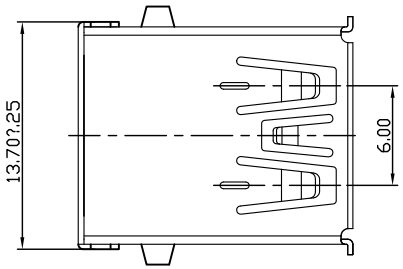

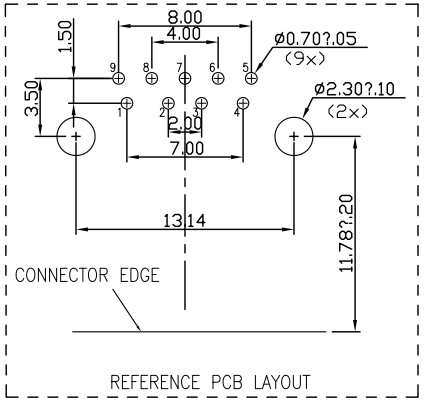

SPECIFCATIONS:
Contact current Rating:
1.8 Amperes for pin1&pin4.
0.25 Amperes other contacts
Dielectric Withstanding Voltage:AC 100V(RMS)
Insulation resistance:100Megohms Minimum.
Contact Resistance:
30mΩ Max for pin1&pin4
50mΩMax for other contacts
Mechanical Characteristics:
Mating Force:35 Newtoms.Maximum
Unmating Force:10 Newtoms.MInimum.
MATERIAL: 8N Min After Durability
Housing: PBT+30%GF 94V-0 COLOR:BLUE
Contact: copper alloy(T=0.25mm)
Shell: Brass
PLATING:
Contact: Au Plated on contact area
Tin Plated on solder area
Nickel underplating over all
Shell: Nickel Plated
operating Temperature:-55℃to+85℃

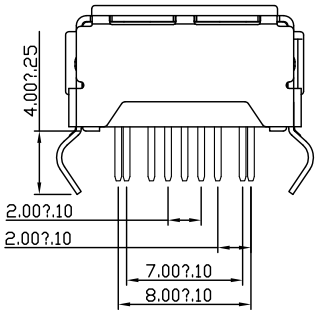

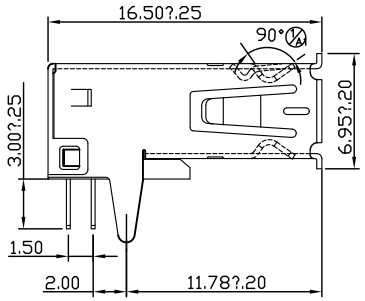

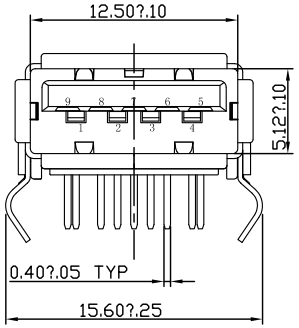

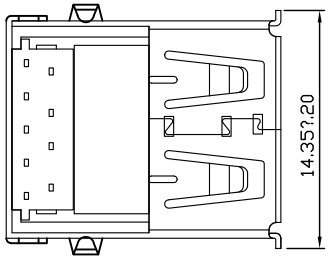

Pin Number	Signal Name
1	VBUS
2	D-
3	D+
4	GND
5	SSRX-
6	SSRX+
7	GND
8	SSTX-
9	SSTX+
Shell	Shield

UNLESS OTHERWISE SPECIFIED
TOLERANCES

	METRIC
X. +/-	0.30
.X +/-	0.25
.XX +/-	0.25
FRACTIONS +/-	2.00°
ANGLES +/-	

DIMENSIONS (METRIC) (MM)

APPROVAL	日期
制图	2012.03.19
审核	2012.03.19
核准	2012.03.19
文件位置	

ANGLE OF PROJECTION

品名 规格	USB 3.0 AF 90?DIP 有卷边无缺口弯脚 脚长3.0
料号	SEE TABLE
字张	A4
工程图号:	DWG-USBAF-052
版本.	A4
比例	1 : 1
状态码	A
页数	1 OF 1