承认书

客户名称:

品名规格: SS-12F44 G5

客户料号:

执行标准:

拟制	工程	品质	批准

客户承认

工程	品质	审核	批准

目录

封面 ……（1）
目录 ……（2）
图纸 ……（3）
产品各规格参数 ……（4-6）

CAD FILE:

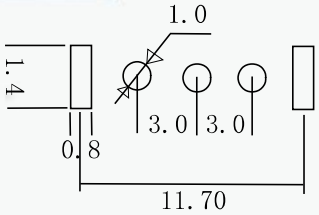

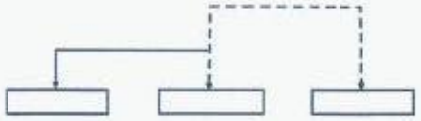

OPTIONAL KNOB:
G 2-15
VG 2-15

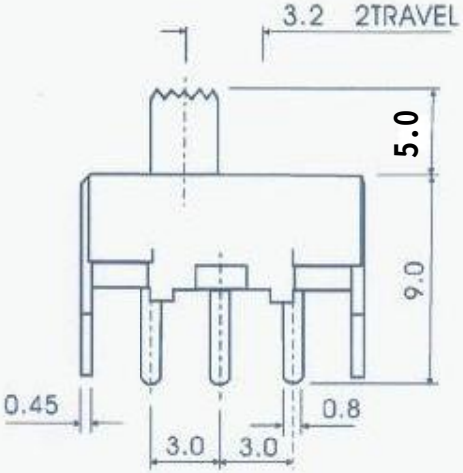

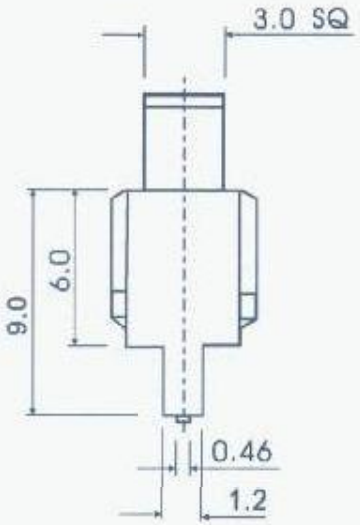

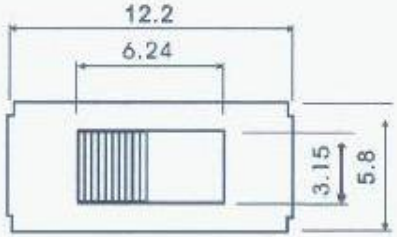

NO.	PART NAME	MATERIAL	QTY	FINISHING
8				
7				
6				
5	SPRING	SUS	1	TEMPER
4	CAM STICK	SUS	1	NATURAL
3	INSERT CASE	NYLON+F.G/BRASS STRIP	1	GREY/Ag PLATED OVER Ni PLATED
2	COVER	POM	1	BLACK/WHITE
1	INSERT KNOB	POM/PBS C5210R-EH	1	WHITE/Ag CLAD

TOLERANCE UNLESS SPECIFIED
WITHIN :1.5mm±0.1mm
OVER :1.5mm±0.2mm

ISSUE	DATE	DESCRIPTIONS	APPD.

TITLE : Slide Switch

UNIT :MM

DRWG NO.:

MODEL: SS-12F44 G5

SCALE:5:1

DWN

CHK'D

APPD.

	文件编号	
	发布日期	
SPECIFICATION 规格书	第 A 版	第 1 页 共 3 页

MODEL NO.
产品名称.

DRAWN 制訂		APPD. 審 批	

1. RATING (额 定 值) : DC 50V 0.5A

2. FUNCTION (接触型式) : 1P2T

3. TIMING (时间特性) : NON-SHORTING

4. ELECTRICAL CHARACTERISTICS (电气性能规格):

ITEM 项目		TEST CONDITIONS 测试条件	PERFORMANCE 规格
4.1	CONTACT RESISTANCE 接触电阻	1000Hz MEASURED AT SMALL CURRENT(100 mA OR LESS) 在微小电流(100mA) 以下测试.	30mΩ MAX. 30 毫欧以下。
4.2	INSULATION RESISTANCE 绝缘电阻	APPLY A VOLTAGE OF 500V DC FOR 1 MIN. TO FOLLOWING PORTIONS AFTER WHICH MEASUREMENT SHALL BE MADE. (1) BETWEEN BODY AND CONDUCTOR. (2) BETWEEN CONDUCTORS NOT TO BE CONTACT. 输入 500V DC 电压 1 分钟,按以下接触方法测试: (1) 接触端子之间. (2) 胶座体与排脚之间.	100MΩ MIN. 100 兆欧以上。
4.3	DIELECTRIC STRENGTH 耐电压	AC 500V (50-60Hz)FOR 1 MIN TRIP CURRENT:0.5 mA (1) BETWEEN TERMINALS. (2) BETWEEN INDIVIDUAL TERMINALS AND FRAME. 输入 AC 500V(50-60Hz)电压,1 分钟感度电流为 0.5 mA,按以下接触方法测试: (1) 排脚相互之间 (2) 排脚与外壳之间	WITHOUT DAMAGE TO PARTS ARCING OR BREAKDOWN ETC. 没有绝缘破坏等异常.

5 .MECHANICAL CHARACTERISTICS (机械性能规格)

ITEM 项目		TEST CONDITIONS 测试条件	PERFORMANCE 规格
5.1	OPERATING FORCE 作动力	MEASUREMNET SHALL BE MADE AT THE NEAREST POINT OF THE COMPONENT OR AT THE POINT 3mm FROM THE TIP OF THE ACTUATOR (KNOB) 在距离胶柄前端 3mm 作测定点	250±100gf
5.2	TERMINAL STRENGTH 端子强度	A STATIC LOAD OF (300 gf) SHALL BE APPLIED TO THE TIP OF THE TERMINAL FOR 1 MIN IN ANY DIRECTION. 在任意一个方向的先端加上(300 gf)力度测试,时间为 1 分钟.	ELECTRICAL CHARACTERISTICS SHALL BE SATISFIED WITHOUT DAMAGE OR EXCESSIVE LOOSENESS OF ACTUATOR. 在端子中没有裂开.松动等异常, 满足于机械、电器性能.
5.3	DISPLACEMENT OF ACTUATOR (KNOB) 柄 强 度	A STATIC LOAD OF 10N(1Kgf) SHALL BE APPLIED TO THE TOP OF THE ACTUATOR (KNOB) AND THEN DISPLACEMENT SHALL BE MEASURED TO THE DIRECTION OF THE ARROW 在柄端施加 1Kgf 的力度,位移应沿印记的方向上定	THE LEVER SHALL HAVE NO SERIOUS DEFORMATION AND FUNCTION IS NORMALLY 柄部无严重变形, 可正常工作

6. DURABILITY (耐久性)：

ITEM 项目		TEST CONDITIONS 测试条件	PERFORMANCE 规格
6.1	LIFE TEST 寿命试验	WITHOUT LOAD: A SWITCH SHALL BE SUBJECT TO 5,000 CYCLES AT A SPEED OF 10-15 CYCLES PER 1 MIN. 无负荷: 操作者以每分钟 10-15 次的频率作 5,000 回之无负荷测试.	(1) CONTACT RESISTANCE 接触电阻 100mΩ MAX. 不能超于 100mΩ. (2) INSULATION RESISTANCE 绝缘电阻 50MΩ MIN. 50 兆欧以上 (3) WITHSTAND VOLTAGE 耐电压 AC 500V, 1 MINUTE; AC500 1 分钟 (4) OPERATING FORCE 劝作力 ±30% OF INITIAL VALUE 变化范围初始值 ±30% (5) WITHOUT DAMAGE TO PARTS ARCING OR BREAKDOWN ETC. 无外表损伤,并且满足于机械、电器性能.
6.2	SOLDERA-BI LITY TEST 可焊性试验	THE TOP OF THE TERMINALS SHALL BE DIPPED 2mm IN THE SOLDER BATH OF 230±5℃ FOR 3±0.5 SECONDS. 端子顶部被浸入锡焊池中 2mm 深，温度为 230±5℃，时间为 3±0.5 秒.	THE AREA OF SOLDERING. SHOULD BE OVER 75% 焊接面积要有 75%以上.
6.3	RESISTANCE TO SOLDERING HEAT TEST 耐焊性试验	SOLDER BATH METHOD: SOLDER TEMPERATURE 230±5℃ IMMERSION TIME 3±0.5 SEC IMMERSION DEPTH UP TO THE SURFACE OF THE BOARD THICKNESS OF PRINTED WIRING BOARD 1 mm DIMENSIONS OF COMPONENT HOLES IN THE PRINTED WIRING BOARD SHALL BEING ACCORDANCE WITH THOSE SPECIFIED IN THIS SPECIFICATION. 焊炉焊接的时候温度控制在 230±5℃,过炉时间为 3±0.5 秒,于基板厚度为 1.6mm	THERE SHALL BE NO DEFORMATION OF THE SWITCH. MECHANICAL AND ELECTRICAL CHARACTERISTICS SHALL BE SATISFIED. 本体无变形,满足于机械、电气性能。
6.4	HEAT TEST 耐热试验	THE SWITCH SHALL BE STORED AT A TEMPERATURE OF 85±2℃ FOR 96 HOURS. AND THEN IT SHALL BE SUBJECTED TO THE CONTROLLED RECOVERY CONDITIONS FOR 1 HOUR AFTER WHICH MEASUREMENT SHALL BE MADE. 放置在温度 70±2℃中测试 48 小时后,再放置正常室温中 1 小时来测定	THERE SHALL BE NO DAMAGE ON APPEARANCE. MECHANICAL AND ELECTRICAL CHARACTERISTICS SHALL BE SATISFIED. 外观无异常, 满足于机械,电器性能.

6.5	COLD TEST 耐冷试验	THE SWITCH SHALL BE STORED AT A TEMPERATURE OF -25±3℃ FOR 96 HOURS. AND THEN IT SHALL BE SUBJECTED TO THE CONTROLLED RECOVER CONDITIONS FOR 1 HOUR AFTER WHICH MEASUREMENT SHALL BE MADE. 放置在温度-25±3℃中 96 小时后,再放置常温常湿中 1 小时来测定。	THERE SHALL BE NO DEFORMATION OR CRACKS IN MOLDED PART. 外观无异常,满足于机械、电器性能。
6.6	HUMIDITY TEST 潮湿试验	THE SWITCH SHALL BE STORED AT A TEMPERATURE OF 40±2℃ AND A HUMIFITY OF 90% TO 96% FOR 96 HOURS.THEN THE SWITCH SHALL BE MAINTAINED AT STANDARD ATMOSPHERIC CONDITION FOR 1 Hr FOR OTHER PROCEDURES BE MADE. 放置 40±2℃.的相对湿度为 90~96%环境中 96 小时后,再将样版放在正常环境 1 小时后进行测试。	
6.7	STANDARD ATMOSPHEIC CONDITIONS 测试标准状态	UNLESS OTHERWISE SPECIFIED THE STANDARD RANGE OF ATMOSPHERIC CONDITIONS FOR MAKING MEASUREMENTS AND TESTS ARE AS FOLLOWS: (1) AMBIENT TEMPERATURE : 5℃ TO 35℃ (2) RELATIVE HUMIDITY : 45% TO 85% (3) AIR PRESSURE : 86Kpa TO 106Kpa 在没有指定的情况下测试温度、湿度、气压如下: (1) 温度为 5~35℃ (2) 湿度为 45%~85% (3) 气压为 86Kpa~106Kpa	
6.8	PRACTICAL TEMPERATURE RANGE 使用温度范围	-16℃~+60℃. 在-16℃~+60℃温度内使用.	