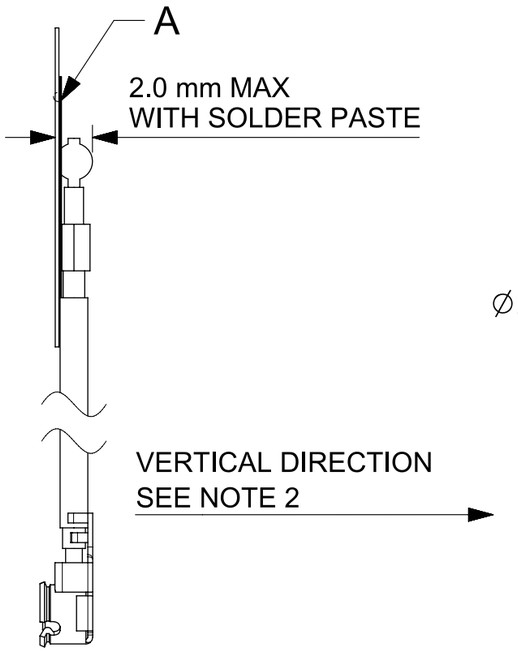

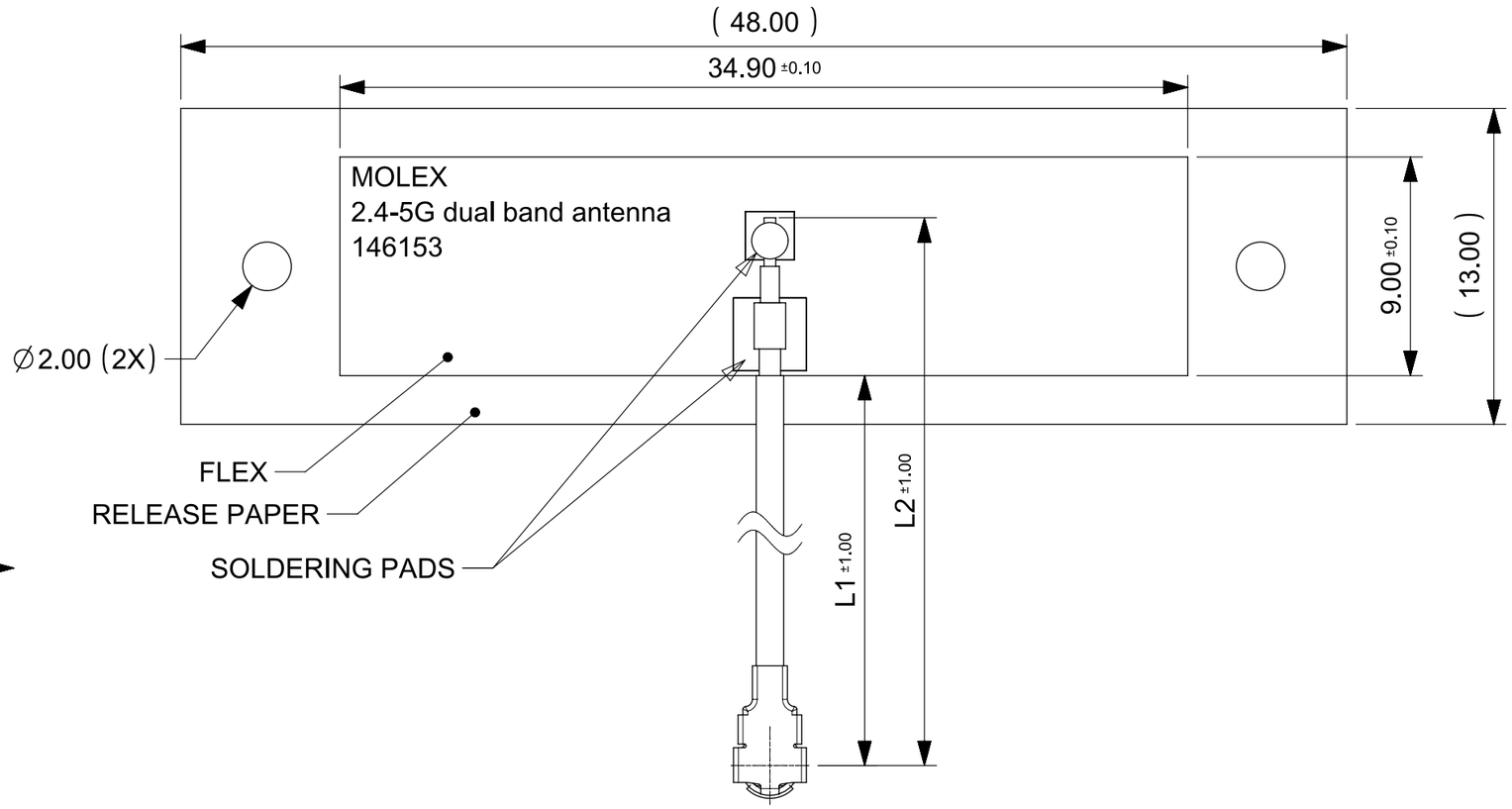

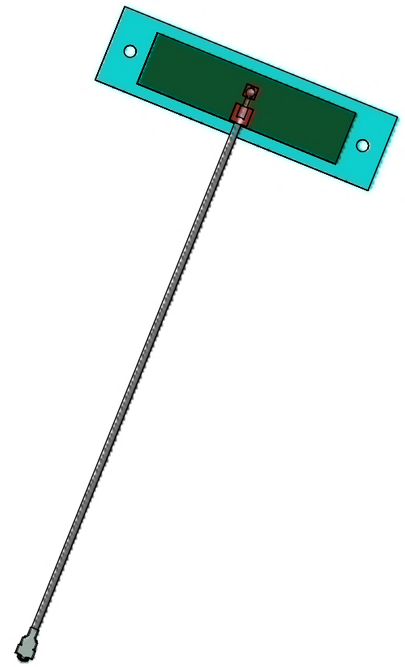

3D VIEW

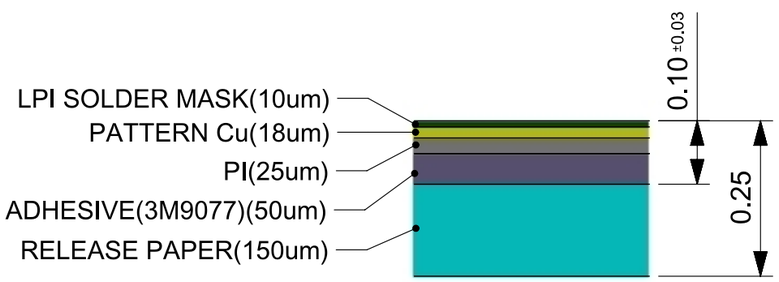

DETAIL A
FLEX LAYER

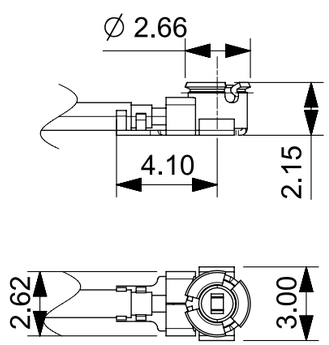

CONNECTOR

ITEM	MATERIAL NO.	CABLE LENGTH "L1"	CABLE LENGTH"L2"
1	1461530050	43.5mm	50mm
2	1461530100	93.5mm	100mm
3	1461530150	143.5mm	150mm
4	1461530200	193.5mm	200mm
5	1461530250	243.5mm	250mm
6	1461530300	293.5mm	300mm

NOTE:
1.MATERIAL
FLEX:SEE FLEX LAYER
CABLE:∅1.13mm
CONNECTOR:OD1.13,2.5H UFL CONNECTOR(GOLD PLATED)
2.CAN NOT LIFT UP CABLE IN VERTICAL DIRECTION
3.SOLDER MASK :BLACK
4.APPLICATION SPEC PLEASE REFER TO AS OF 1461530100
5.PRODUCT SPEC PLEASE REFER TO PS OF 1461530100
6.PACKAGING DRAWING PLEASE REFER TO PK OF 1461530100

THIS DRAWING CONTAINS INFORMATION THAT IS PROPRIETARY TO MOLEX INCORPORATED AND SHOULD NOT BE USED WITHOUT WRITTEN PERMISSION

EC DESCRIPTION
EC NO: 167789
DRWN: Kang Cheng 08/11/17
CHK'D: Colin xu 08/11/17
APPR: Stary Song 08/11/17
REV C1

QUALITY SYMBOLS
A = 0
B = 0
C = 0

GENERAL TOLERANCES (UNLESS SPECIFIED)
ANGULAR TOL ± 1/2 °
4 PLACES ±
3 PLACES ± 0.05
2 PLACES ± 0.15
1 PLACE ± 0.2
0 PLACES ± 0.5
DRAFT WHERE APPLICABLE MUST REMAIN WITHIN DIMENSIONS

DIMENSION UNITS: mm
SCALE: 4:1
DRWN BY: Kang Cheng DATE: 2017/11/08
CHK'D BY: Colin xu DATE: 2017/11/08
APPR BY: Stary Song DATE: 2017/11/08
DRAWING SIZE: A3
THIRD ANGLE PROJECTION

molex

SD FOR 2.4/5GHz BALANCE FLEX ANTENNA

PRODUCT DESIGN DRAWING

SERIES	MATERIAL NUMBER	CUSTOMER
146153	See Table	GENERAL MARKET

DOCUMENT NUMBER	DOC TYPE	DOC PART	SHEET NUMBER
1461530050	PSD	SD	1 OF 1