Operation: Push-Push

ROHS

LTEM NO.:SMO-014-T

(MICRO SIM CARD SOCKETS)

Unit:mm

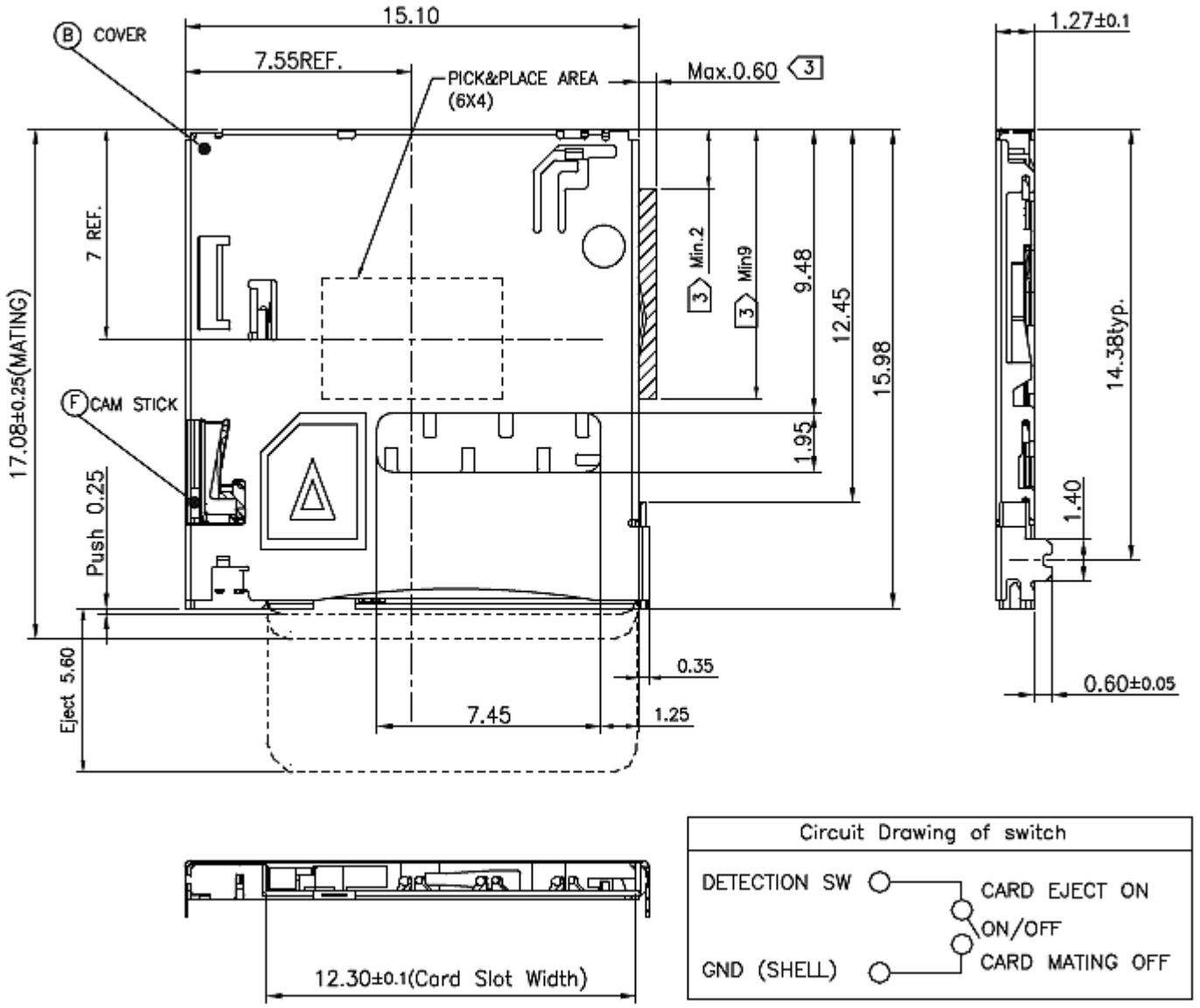

Technical parameter

PROJECT \ LEVEL		A[better product]	B[average product]	C[low product]
Electrical Properties	Initial Contact Resistance	30mΩ max.	30mΩ max.	no data!
	Contact Resistance	100mΩ min.100V DC Skey/PD: 50mΩ min.100V DC		
	Withstand Voltage	300V AC for 1min	250 V AC for 1min	
Durable Performance	There No Load	8,000 Cycles	**6,000 Cycles**	no data!
	Rated Load	6,500 Cycles 50mΩ max.	**4,500 Cycles 30mΩ max.**	no data!
Insertion Force		4.0Kgf MAX (Springback:)		

表面貼裝 SMT

側向導入 LATERAL

精密部品 NICETY

可靠 STABILIZE

適合環保 RoHS

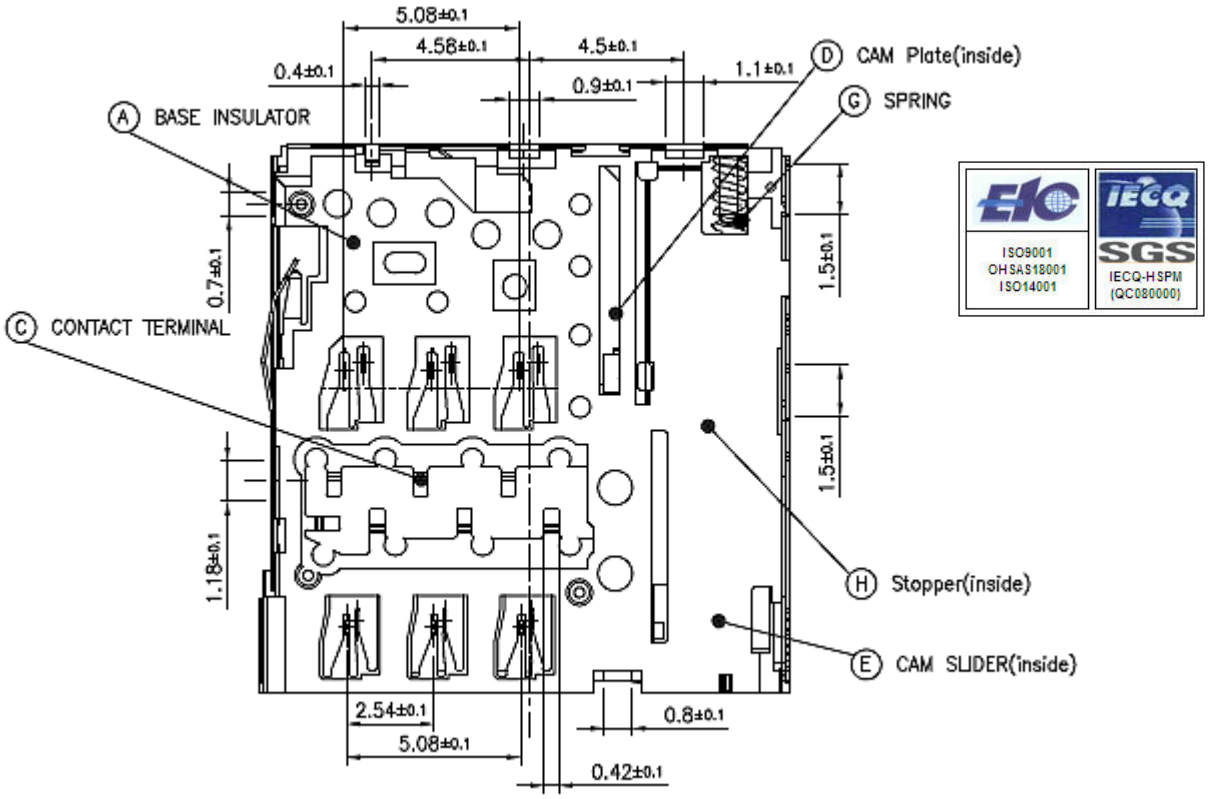
5.08±0.1
4.58±0.1
4.5±0.1
0.4±0.1
0.9±0.1
1.1±0.1
A BASE INSULATOR
D CAM Plate(inside)
G SPRING
0.7±0.1
1.5±0.1
C CONTACT TERMINAL
1.5±0.1
1.18±0.1
H Stopper(inside)
E CAM SLIDER(inside)
2.54±0.1
5.08±0.1
0.8±0.1
0.42±0.1
ISO9001
OHSAS18001
ISO14001
IECQ-HSPM
(QC080000)

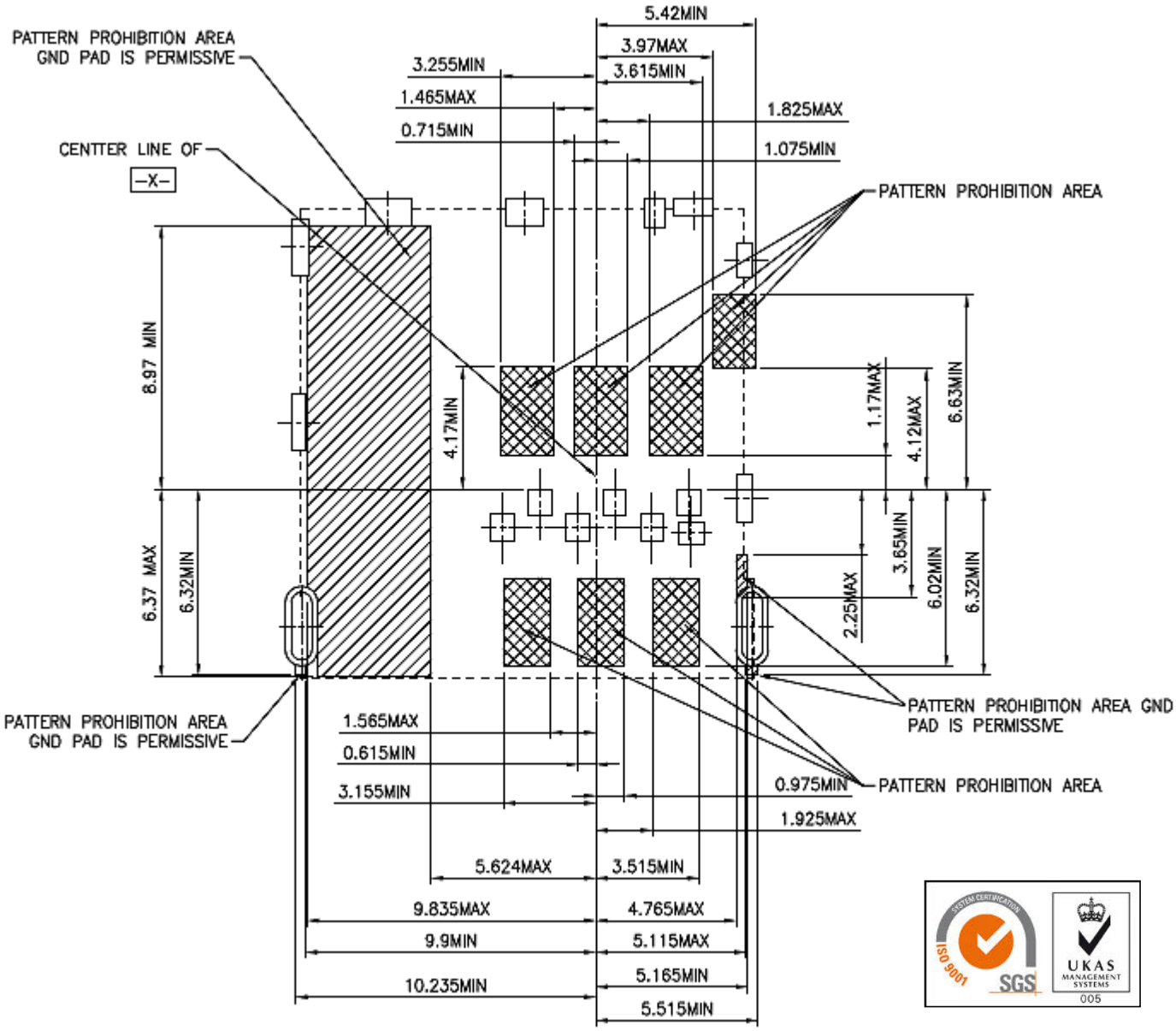
PATTERN PROHIBITION AREA
GND PAD IS PERMISSIVE
CENTTER LINE OF
-X-
5.42MIN
3.97MAX
3.615MIN
3.255MIN
1.465MAX
0.715MIN
1.825MAX
1.075MIN
PATTERN PROHIBITION AREA
8.97 MIN
4.17MIN
1.17MAX
4.12MAX
6.63MIN
6.37 MAX
6.32MIN
3.65MIN
6.02MIN
6.32MIN
2.25MAX
PATTERN PROHIBITION AREA GND
PAD IS PERMISSIVE
PATTERN PROHIBITION AREA
GND PAD IS PERMISSIVE
1.565MAX
0.615MIN
3.155MIN
0.975MIN
PATTERN PROHIBITION AREA
1.925MAX
5.624MAX
3.515MIN
9.835MAX
4.765MAX
9.9MIN
5.115MAX
10.235MIN
5.165MIN
5.515MIN
ISO 9001
SGS
UKAS
MANAGEMENT
SYSTEMS
005

CIRCUIT BOARD SIZE

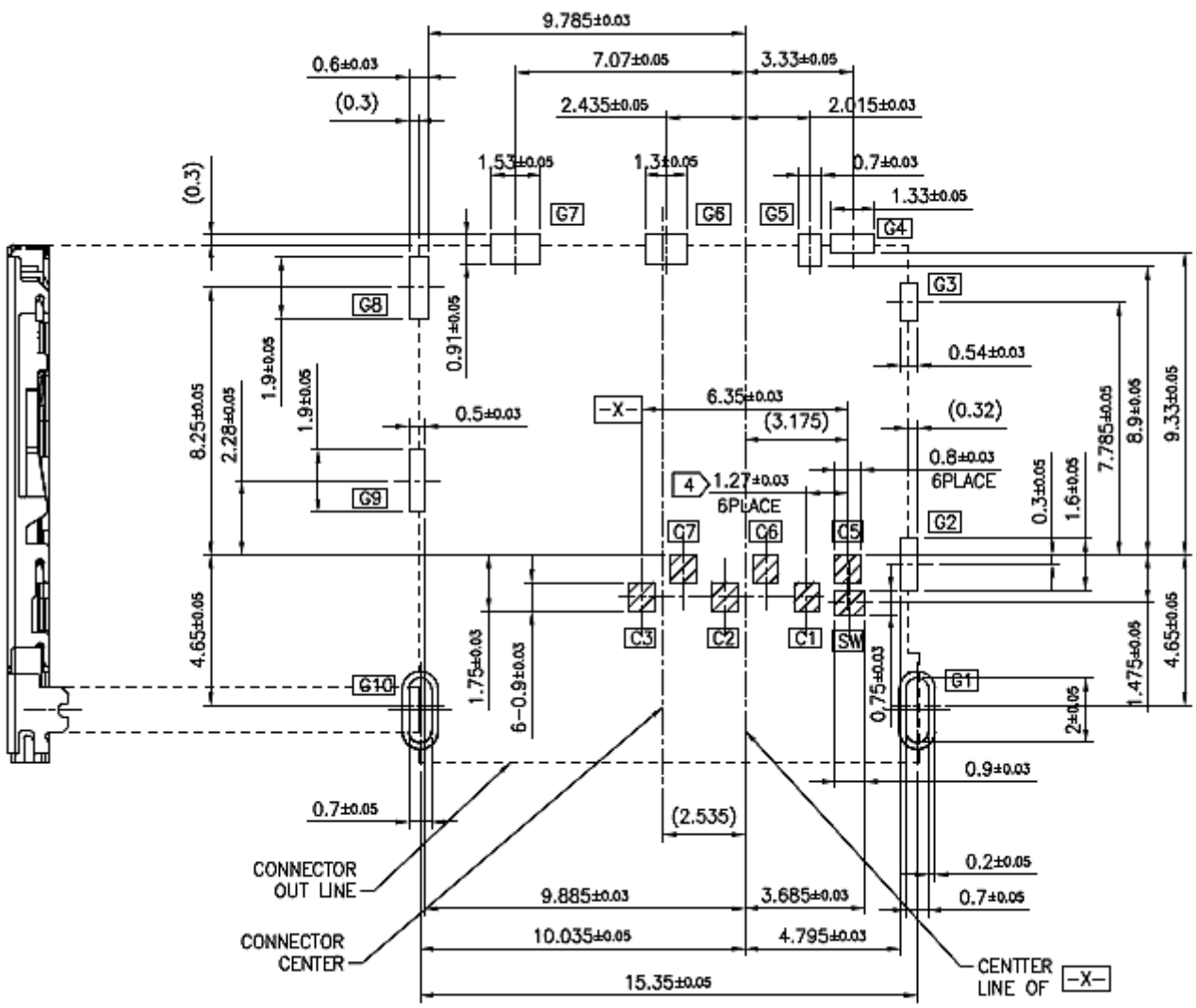

PIN Assignment

SIM CARD Pin DESIGN			
Pin No.	Pin NAME	Type	Description
①	C1 卡電源	1	VCC
②	C2 復位	1	RST
③	C3 時鐘	1	CLK
④	C5 接地	1	GND
⑤	C6 Vpp	1	VPP
⑥	C7 輸入/輸出	1	I/O
⑦	SWITCH	1	Detection
[8~18]	GND	11	Shell Ground

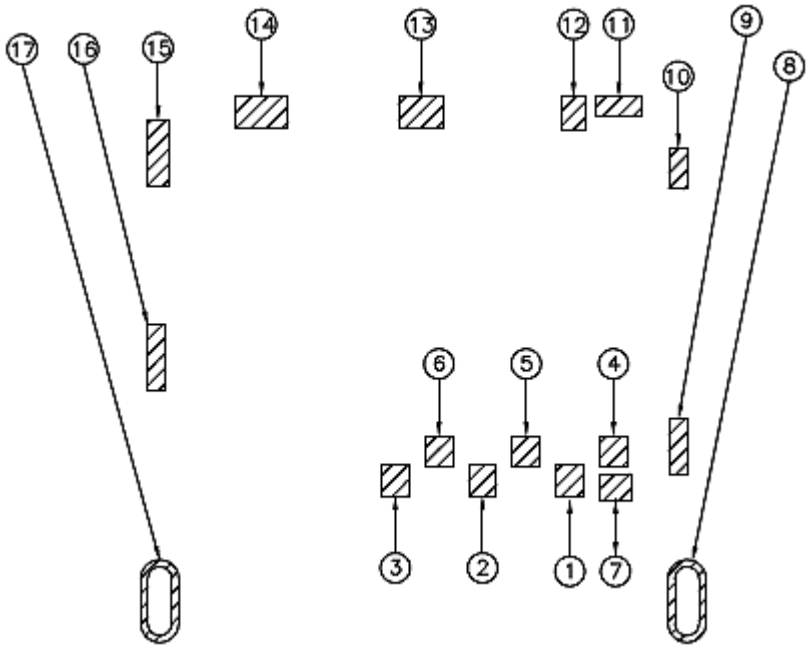

注記 NOTICE

1. 碩方電子公司擁有最終解釋權；The company reserves the right of final interpretation；
2. 文件禁止外洩、轉載；Leaked and reproduced prohibited；
3. 未經授權修改無效。Modify is invalid.