1000 Base-T Single Port Transformer Module

- Designed to meet IEEE802.3af requirement
- Designed to meet IR 255℃ peak requirement
- Primary inductance 350uH min with 8mA DC Bias
- ROHS Compliant
- Operating temperature range:0℃to+70℃
- Storage temperature range:-25℃to+125℃

Electrical Specifications @ 25℃

Part Number	Turn Ratio		Insertion Loss 0.5~100MHz (dB Max)	Return Loss (dB Min)			Cross Talk (dB Min)		CMRR (dB Min)	CWW (pF Max)	LK (uH Max)	DCR (Ω Max)	Hi-Pot (Vrms)
	Tx	Rx		0.5-30 MHz	30.1-60 MHz	60.1-80 MHz	0.5-40 MHz	40.1-100 MHz	0.50-100 MHz				
QT24A03	1:1	1:1	-1.0	-16	-14	-12	-35	-30	-30	35	0.5	1.2	1500

Mechanical

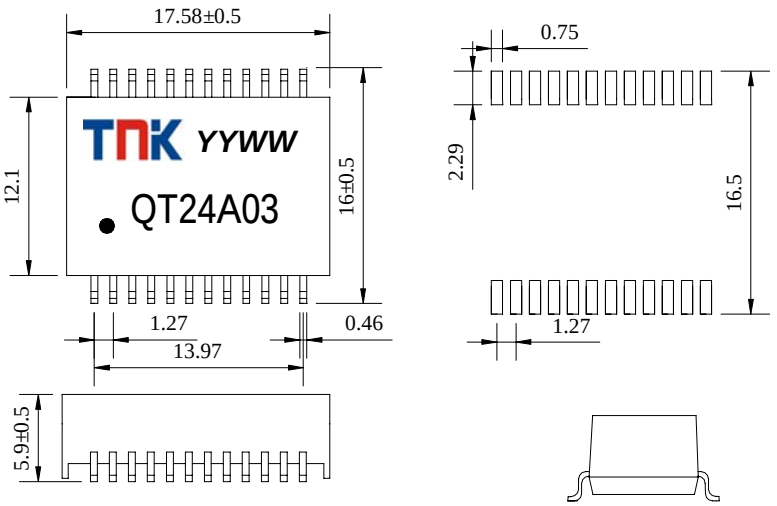

Dimension:mm

Unless otherwise specified,tolerances:±0.25(mm)

Data sheet subject to change without notice

Schematics

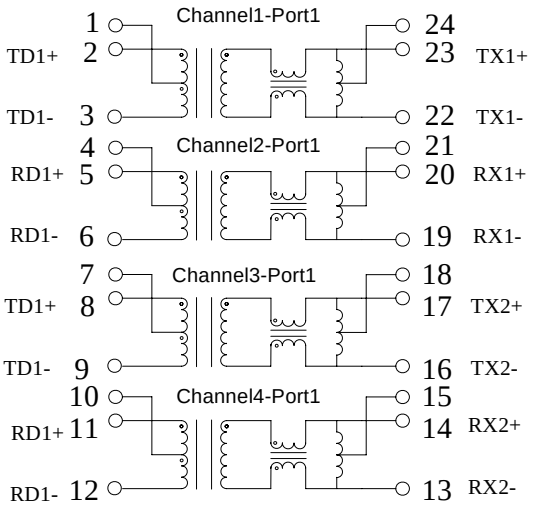

东莞市讯康电子科技股份有限公司
地址：广东省东莞市塘厦镇林村里牙塘工业区 145 号
TEL:(86)769-87923451 FAX:(86)769-87923450
WEBSITE:http://www.tnk.net.cn