CAD FILE:

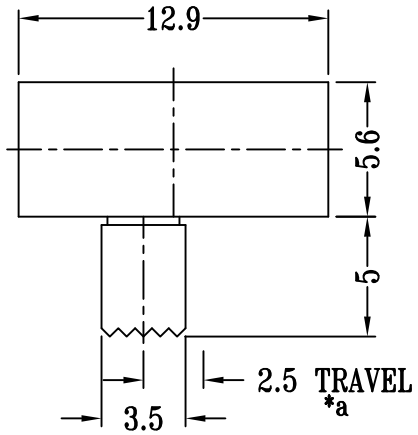

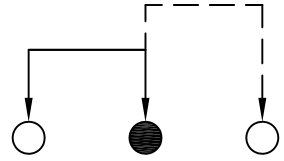

SCHEMATIC (NON-SHORTING)

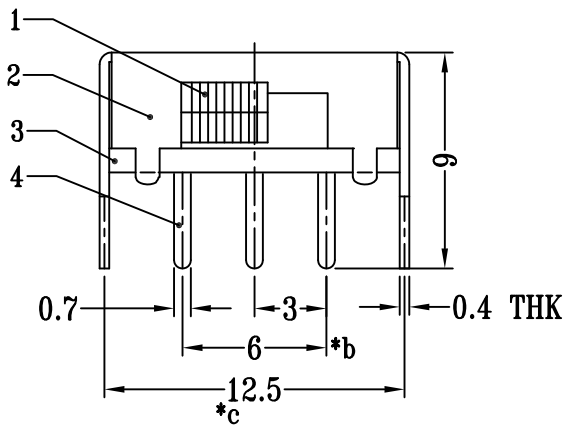

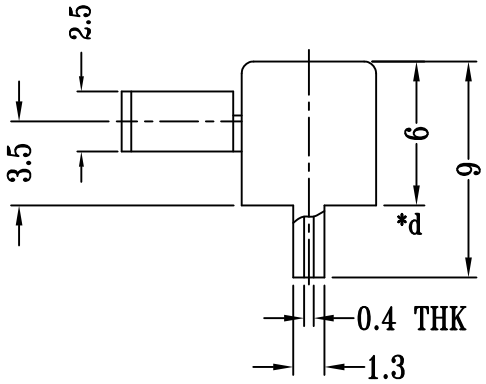

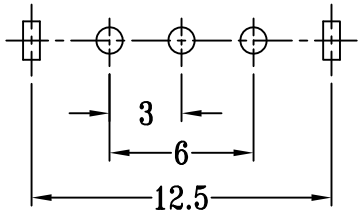

P.C.B LAYOUT
BOTTOM VIEW

注: “*”表示关键尺寸（4个）

NO.	PART NAME	MATERIAL	Q'TY	FINISHING
8				
7				
6	SPRING	STEEL WIRE	1	NATURAL
5	CONTACT	BRASS STRIP	1	Ag PLATED
4	TERMINAL	BRASS STRIP	3	Ag PLATED
3	BASE	PHENOLIC RESIN	1	NATURAL
2	FRAME	STEEL STRIP	1	Ni PLATED
1	KNOB	POM	1	BLACK

TOLERANCE UNLESS SPECIFIED
WITHIN 1.5mm : ±0.1mm
OVER 1.5mm : ±0.2mm

ISSUE	DATE	DESCRIPTIONS OF REVISION	APPD.
A	2012-09-06	初 版	

TITLE : VERTICAL SLIDE SWITCH
MODEL: SK-12E12-G5
UNIT : mm
SCALE: 3:1
DRWG NO.: LT-DR-SK12E12G5-00
DWN. 余 丽 珍 2012-09-06
CHK'D
APPD.