DRAWING MADE IN AMERICAN PROJECTION

WAS P-79-6102

1. PARTS COMPLY WITH TE SOLDERABILITY SPEC. 109-11-3

2. CONTACT IS PLATED OVERALL WITH .000050 NICKEL, THEN .000030 GOLD OVER CONTACT LENGTH INDICATED AND TIN PLATED ON SOLDER TAIL END.

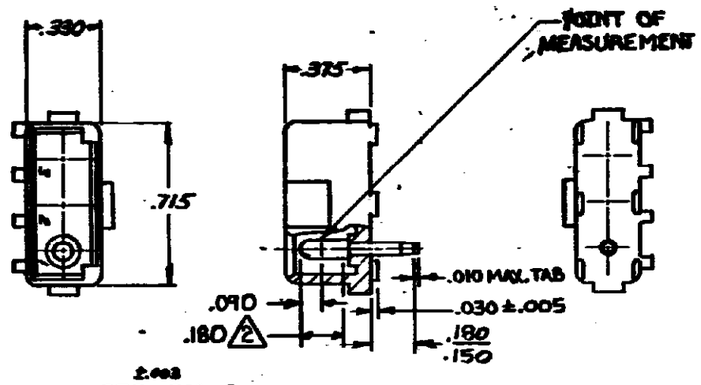

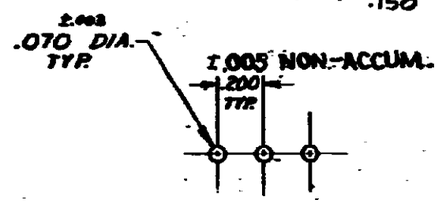

RECOMMENDED LAYOUT FOR .062 THICK P.C. BOARD

SUPERSEDED BY 1586532-2

ASSEMBLY NO	HSG. MATL & COLOR	PIN MATL & FINISH
5-350541-2	NYLON - GREEN	COPPER ALLOY - GOLD 2
~~350541-2~~	~~NYLON - NATURAL~~	~~COPPER ALLOY - GOLD~~ 2
350541-1	NYLON - NATURAL	COPPER ALLOY - PRE-TIN

LTR	REVISION RECORD	DR	CHK	DATE
L2	REVISED PER ECR-18-008156	JB/DZ		19JUN 2018
L1	REVISED PER ECR-13-008342	AV/RP		12NOV 2013
L	OBSOLETE 1-1,2L 3-1,4-1,5-1,6-1,7-1, 8-1,9-1,1-2,2-2,3-2, 4-2,6-2,7-2,8-2,9-2	KW/RS		4-21-86
K	RESTORED		RS	
K	REV. PER M-7375			
J	WAS REF. M-7285		DH	
H	ADDED NOTE 2 M-6894		DH	
G	ADDED CLAIM FOR. M-5934		DH	
F	REV. Tail Length M-5334		DH	
E	REVISED M-3932		DH	
D	ECN M-3877		DH	9-76
C	RELEASED		DH	7-76
B	ECN M-3462			
A	E.C.N. M-3152			

MATERIAL 350541

REQUIRED PER ASSEMBLY

DESCRIPTION

© 1973 BY AMP INCORPORATED. ALL RIGHTS RESERVED.
AMP PRODUCTS COVERED BY PATENTS AND/OR PATENTS PENDING.

CUSTOMER COPY REFERENCE ONLY

DR 3-20-73 G. Eckman

CHK 4/4/73 L. H. Hackenberg

DE J. Franklin 4-10-73

APP J. Franklin 4-10-73

MATERIAL AND FINISH: SEE TABLE

WIRE RANGE — INSULATION

TOLERANCE EXCEPT AS NOTED ±.015 ±1° 0'

SCALE —

TE Connectivity

CLASS .084 DIA. PIN

TYPE POSITIVE LOCK

INC CM B NO 350541 L2

NAME 3 CIRCUIT MATE-N-LOK P.C. BOARD HEADER

DIMENSIONS IN INCHES, DO NOT SCALE PRINT.

PRINT 53