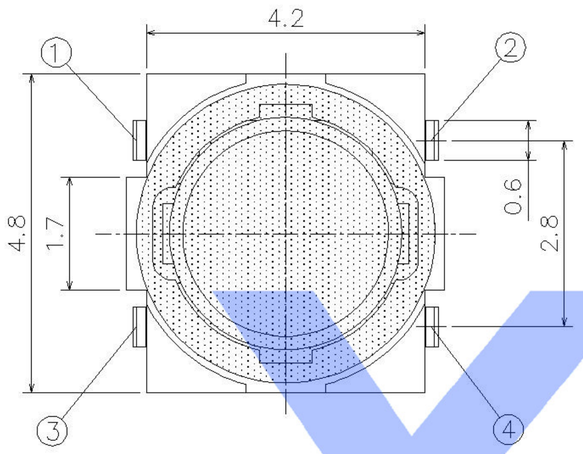

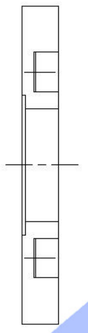

Circuit diagram

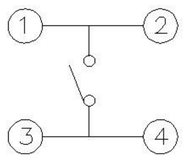

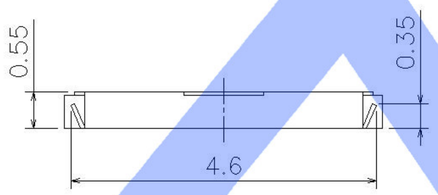

P.C.B Mounting pattern Dimension

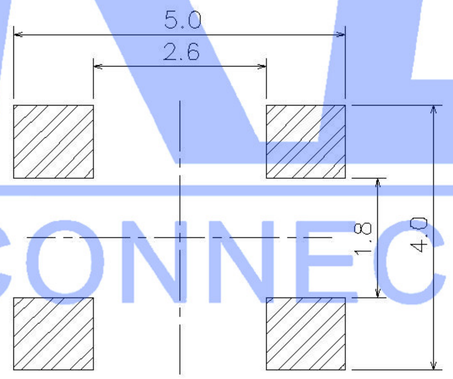

SPECIFICATION

Contact Rating	50mA, 12V DC
Contact Resistance	100mΩ max.
Insulation Resistance	100MΩ min. 500V DC
Dielectric Strength	250V AC/1 minute
Travel	0.25mm
Operating Temp.	-25°C ~ +70°C
Storage Temp.	-30°C ~ +80°C

PAPT NO	TS-1197A-X
Operating Force	A:100gf B:160gf C:260gf
Height	H:0.55

ITEM	PAPT NAMF	TER,NO	QTY	MATERIAL	FINISHING	REMARK
⑤	Terminal	——	4	Brass（0.30t）	ag Plated	——
④	Contact	——	1	F.ag/SUS		——
③	Base	——	1	LCP		——
②	Cover	——	1	Brass	Tin plated	——
①	Keystake	——	1	kapton filmPI		——

MARK	DESCRIPTION	DATE	REVISED	APPROVED
△X				
△X				
△X				

REVISIONS

units:	mm
tolerance:	
X.X	±0.2mm
X.XX	±0.1mm
X.XXX	±0.05mm

UNSPECIFIED TOLERANCES

DSND		DATE		SCALE: N/A
DWN		DATE		VIEW:
CHKD		DATE		UNIT: mm
APPD		DATE		SIZE: A4

MODEL TYPE: TACT SWITCH

PART NO.:

DWG NO.: TS-1197A-X

XKB INDUSTRIAL PRECISION CO.,LIMITED

WEIGHT	SHEET	REVISION
1.0g	1/1	A0

www.xk-dg.cn www.helloxkb.com www.helloxkb.cn

XKB SWITCH CONNECTOR