legion

SLIDE SWITCH

VS12 SERIES

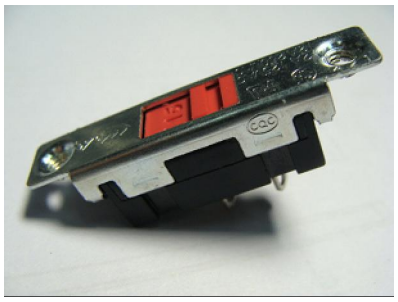

SPECIFICATION

Rating:12A 125/250VAC (UL,CSA)
12(1)A 250V~ T85 1E3(ENEC10,VDE,CB,CQC)
INITIAL CONTACT RESISTANCE:20mΩ Max
OPERATION FORCE:300±200gf
INSULATION RESISTANCE:100mΩ MIN 500VDC
WITHSTAND VOLTAGE:1000VAC FOR 1MINUTE
ENDURANCE:10,00 CYCLES

TERMINAL TYPE	
12	SPDT
11	SPST
01	(1)SPST
02	SPST

(1) - SHORT CIRCUIT AT TERMINAL 1 AND TERMINAL 1B

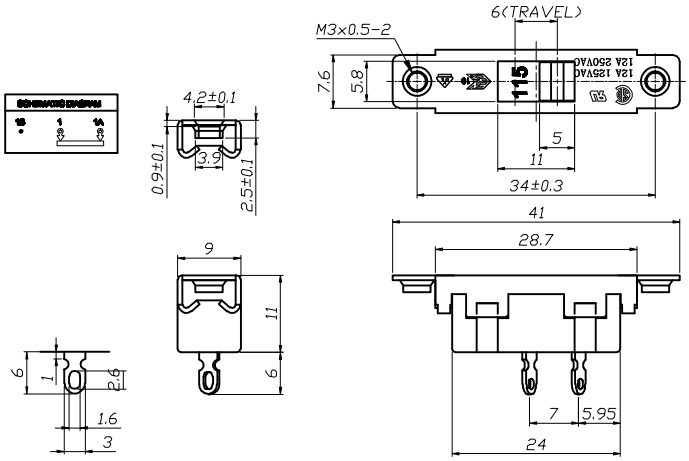

VS12 SERIES ORDERING SYSTEM

VS12 - M 1 1 A R C - R

MODEL NO.

MOUNTING TYPE	
M	SCREW TYPE M3x0.5
H	HOLE TYPE Ø3.2
C	COUNTERSINK M3x0.5
X	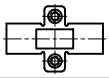
N	SCREW TYPE M3x0.5 WITHOUT MARKING
S	SCREW TYPE M3x0.5 SHORT

TERMINAL TYPE	
12	SPDT
11	SPST
01	(1)SPST
02	SPST

ACTUATOR MARKING	
A	115/230 ENGRAVED ON MOLD
B	115/230 WHITE COLOR PRINTING
C	WITHOUT MARKING
D	127/220 WHITE COLOR PRINTING
E	ON/OFF WHITE COLOR PRINTING

ACTUATOR COLOR	
R	RED
B	BLACK
N	BROWN

BRACKET PLATING	
C	Cr^{+3} ZINC
D	DYEING BLACK

(1) - SHORT CIRCUIT AT TERMINAL 1 AND TERMINAL 1B

RoHS COMPLIANCE	
R	RoHS CON-FORMITY
	NONE