ROHS

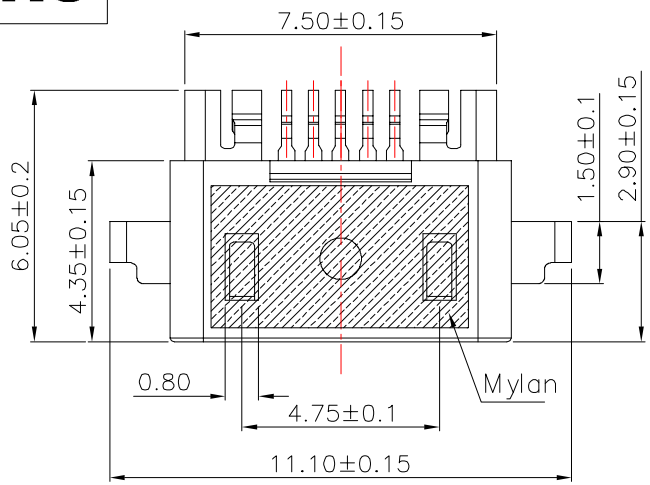

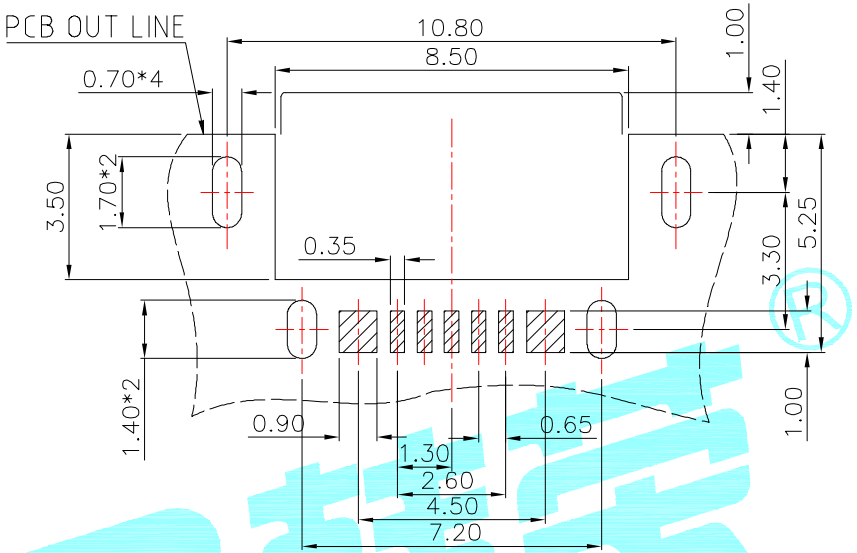

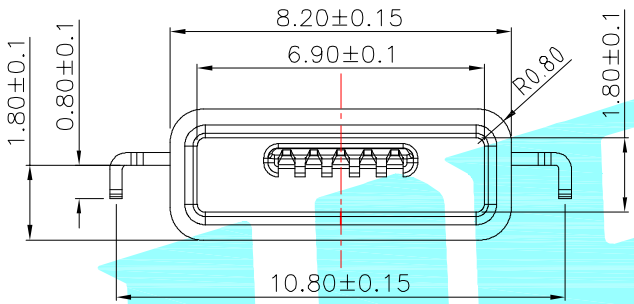

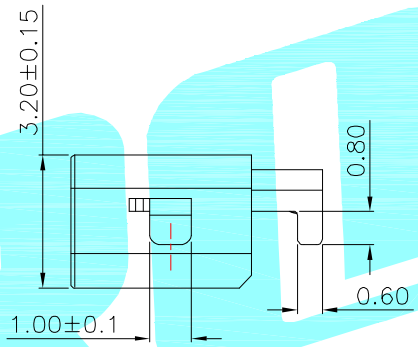

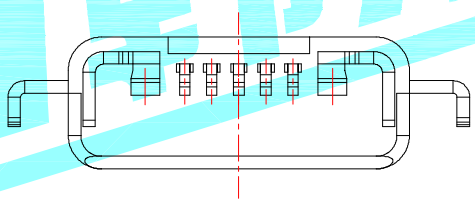

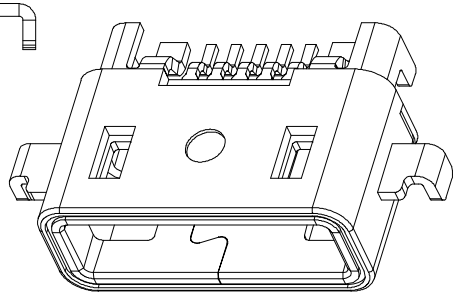

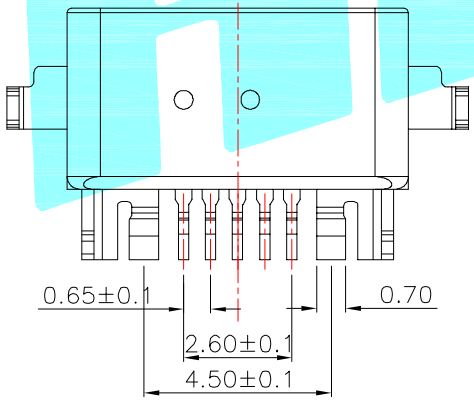

Specifications
1. Rating : AC\DC 30V 1.0A
2. Dielectric withstanding: 250V(AC) for 1min
3. Contact Resistance : 30mΩMax
4. Lnsulation Resistance: 500MΩ Min
5. Operating Temperature Range: −20℃+60℃
6. Operating Life : 5,000Cycles
7. IP Rating: IP64

ITEM	PART NAME	TER'NO.	QTY.	MATERIAL	FINISHING	REMARK
③	Shell	——	1	Brass	Ni Plated	——
②	Contact	——	5	Phosphor Bronze	Au Plated	——
①	Housing	——	1	Nylon	Black	——

APPROVALS		DATE
DRAWN	JKUN.LU	2014/9/29
CHECKED		
APPROVALS		

HRO 韩荣® ELECTRONICS CO.,LTD

TITLE: USB CONNECTOR

PART NO. U-E-M5DD-W-1

TOLERANCES ARE			ANGLE
	30~以上	±0.30	±2°
	10~30	±0.25	
	5~10	±0.20	
	~ 5	±0.15	

UNIT: mm | SCALE: 1:1 | PROJ:

DRAWING NO. —— | SHEET 1 OF 1

ECN NO.	REV.	DATE.	DESCRIPTION.	CHANGE.	CHECK.	APPRO.
——	A	——	NEW	——	——	——