ROHS

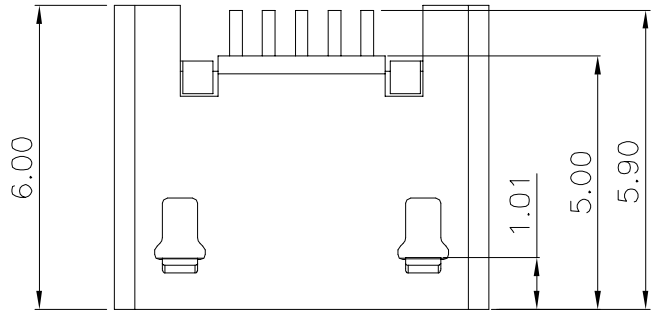

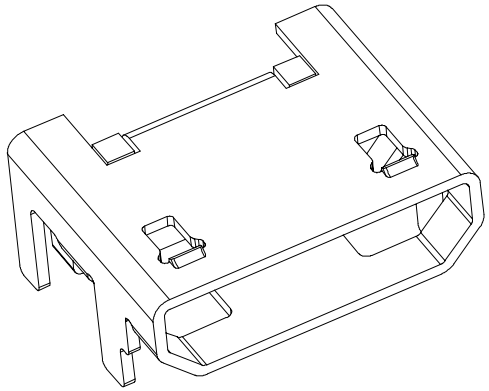

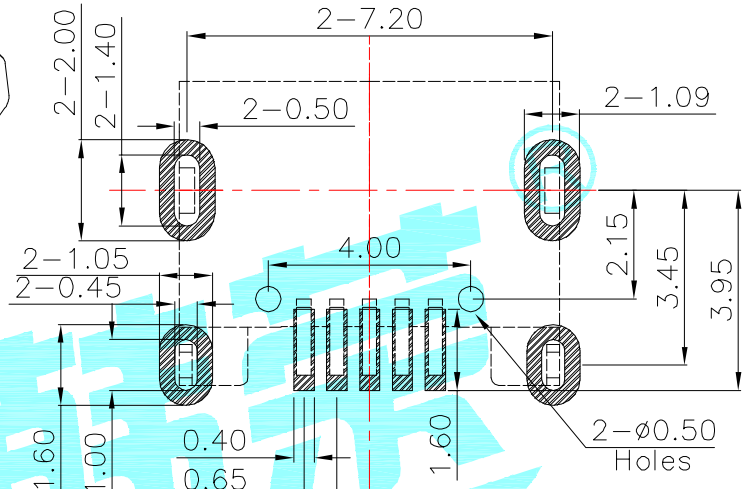

Recommended PCB Layout

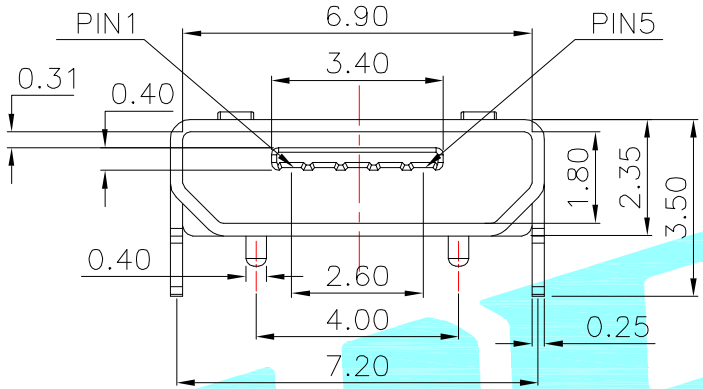

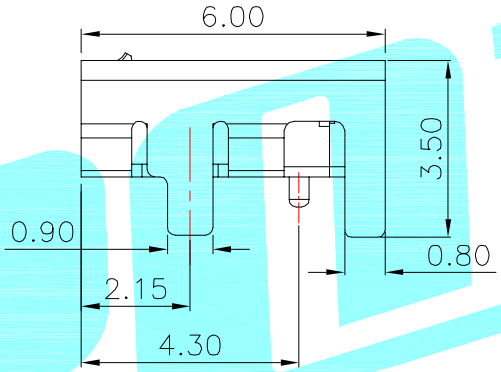

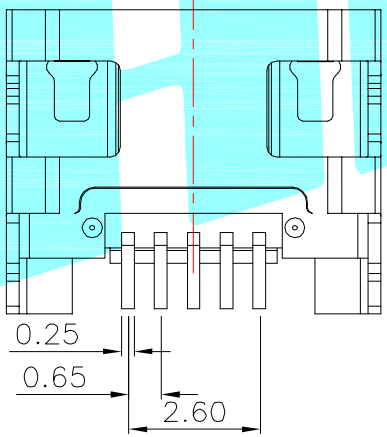

SPECIFICATIONS

1.RATING: DC30V 1.0A
2.MECHANICAL LIFE: 5,000 CYCLES.
3.PACKAGING: 1000PCS/REEL

ITEM	PART NAME	TER'NO.	QTY.	MATERIAL	FINISHING	REMARK
③	Shell	——	1	Phosphor Bronze	Ni Plated	——
②	Contact	——	5	Phosphor Bronze	Au Plated	——
①	Housing	——	1	LCP	Black	——

APPROVALS		DATE	HRO韩荣® ELECTRONICS CO.,LTD		
DRAWN	JKUN.LU	2014/9/29			
CHECKED			TITLE:	USB CONNECTOR	
APPROVALS			PART NO.	U−F−M5DD−W−2	
TOLERANCES ARE: 30~以上 ±0.30; 10~30 ±0.25; 5~10 ±0.20; ~ 5 ±0.15; ANGLE ±2°			UNIT: mm	SCALE: 1:1	PROJ:
			DRAWING NO.	——	SHEET 1 OF 1

ECN NO.	REV.	DATE.	DESCRIPTION.	CHANGE.	CHECK.	APPRO.
——	A	——	NEW	——	——	——