ROHS

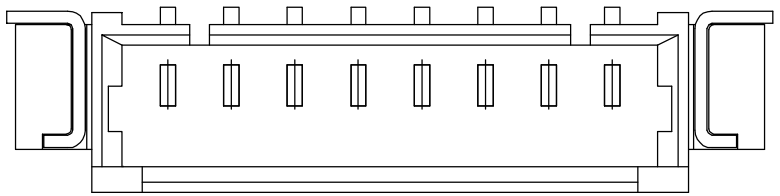

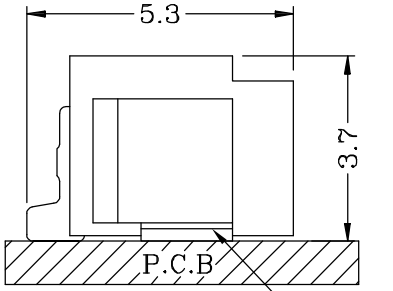

安装图

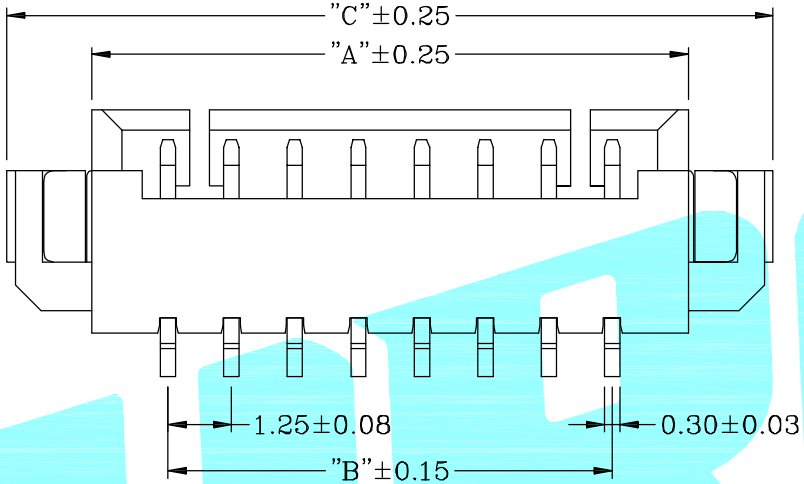

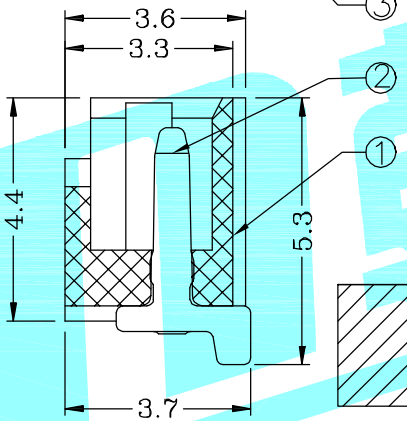

■ 技术参数 SPECIFICATIONS

- 适用线规：AWG#28~#32
  Applicable Wire: AWG#28~#32
- 额定电压：125V DC,AC(rms)
  Rated voltage: 125V DC,AC(rms)
- 额定电流：1A
  Rated Current: 1A
- 耐压值：500V AC/minute
  Withstand voltage: 500V AC/min.
- 工作温度：−25°C ~ +85°C
  Working Temp : −25°C ~ +85°C
- 绝缘电阻：≥1000 MΩ
  Insulation resistance: ≥1000 MΩ
- 接触电阻：≤20mΩ
  Contact resistance: ≤20mΩ

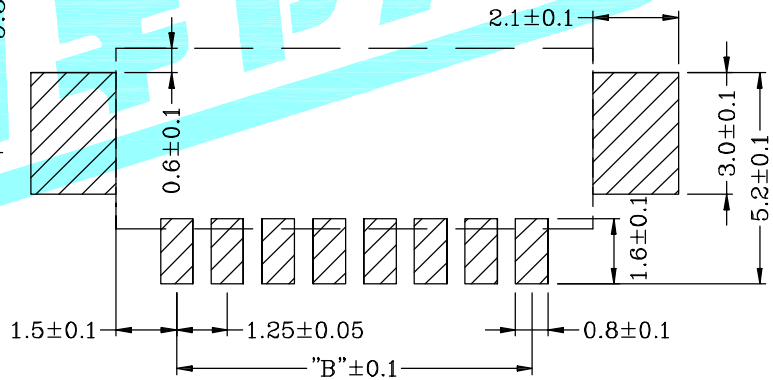

P.C.B Layout

DIM. / Poles	DIM A	DIM B	DIM C
2	4.25	1.25	7.55
3	5.50	2.50	8.80
4	6.75	3.75	10.05
5	8.00	5.00	11.30
6	9.25	6.25	12.55
7	10.50	7.50	13.80

DIM. / Poles	DIM A	DIM B	DIM C
8	11.75	8.75	15.05
9	13.00	10.00	16.30
10	14.25	11.25	17.55
11	15.50	12.50	18.80
12	16.75	13.75	20.05
13	18.00	15.00	21.30

DIM. / Poles	DIM A	DIM B	DIM C
14	19.25	16.25	22.55
15	20.50	17.50	23.80
16	21.75	18.75	25.05
17	23.00	20.00	26.30
18	24.25	21.25	27.55

ITEM	PART NAME	TER'NO.	QTY.	MATERIAL	FINISHING	REMARK
③	Solder Tab	—	2	Phosphor bronae	Ag−PLATED	—
②	PIN	—	—	Phosphor bronae	Ag−PLATED	—
①	Base	—	1	PA46	—	—

APPROVALS		DATE	HRO韩荣® ELECTRONICS CO.,LTD		
DRAWN	JIANKUN.LU	2015.03.17			
CHECKED			TITLE:	FPC	
APPROVALS			PART NO.	1.25T-nP-WT	
TOLERANCES ARE	30~以上 ±0.30; 10~30 ±0.20; 5~10 ±0.15; ~5 ±0.10	ANGLE ±2°	UNIT: mm	SCALE: 1:1	PROJ:
			DRAWING NO.	—	SHEET 1 OF 1

ECN NO.	REV.	DATE.	DESCRIPTION.	CHANGE.	CHECK.	APPRO.
—	A	—	NEW	—	—	—