DORABO®

Cixi Dibo Electronics Co.,LTD

产品规格书
product specification

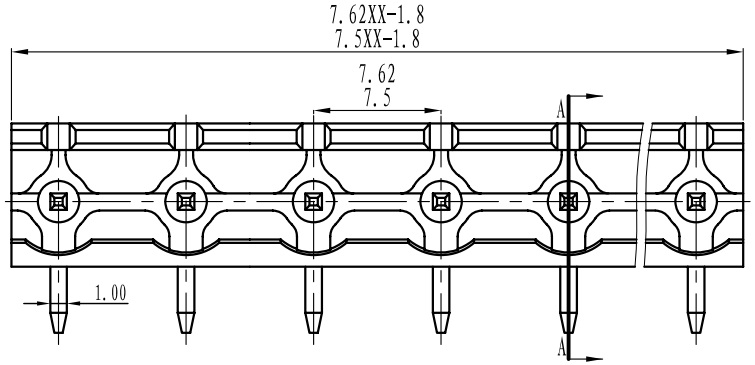

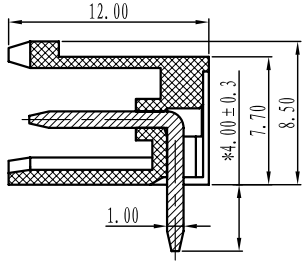

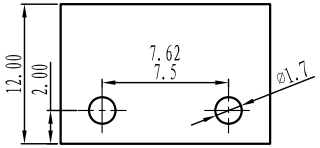

电 气 性 能/Electrical

参考标准/Standard:	UL	IEC
额定电压/Rated voltage:	300V	320V
额定电流/Rated current:	15A	20A

接触电阻/Contact resistance: 20mΩ
耐电压/Withstanding voltage: AC2000V/1Min
绝缘电阻/Insulation resistance: 500MΩ/DC500V

机 械 性 能/Mechanical

温度范围/Temp.Range: -40° C~+105° C
瞬间温度/MAX Soldeting: +250° C, for 5 Sec

尺 寸/Dimensions

间 距/Pitch: 7.5mm, 7.62mm
极 数/Poles: 2P-24P

材 质 及 电 镀/Material

塑 件/Housing: PA66, UL94V-0
焊 针/Pin header: Brass, Tin plated
螺 母/Nut: M2.5 Brass

订 购 方 式：
HOW TO ORDER

□□ - □□ P - □□□ - x x x 客户需求 Custmor Request

型号/Model

极数/POLE

0.未定义/No definition
1.单间距/Sing pitch
2.双倍间/Double pitch

灰色/Grey	10	绿色/Green	40	透明/Transparent	70
蓝色/Blue	20	橙色/Orange	50	黄色/Yellow	80
黑色/Black	30	红色/Red	60	白色/White	90

TOLERANCES EXCEPT AS NOTED

	linear dimension					fillet	chamfer		∠ short angle sid				⌯	—	▱	//	⊥
variable range	to 6	over 6 to 30	over 30 to 120	over 120 to 480	over 480 to	all	to 6	over 6 to	to 10	over 10 to 50	over 50 to 120	over 120 to	all	to 5	over 5 to 30	over 30 to 120	over 120 to
tolerance	±0.1	±0.2	±0.3	±0.5	±0.9	±0.2	±0.5	±1	1°	30'	20'	10'	0.5	0.025	0.06	0.12	0.4

单位/UNITS	mm	尺寸/SIZE	A4	比例/SCALE	
Cixi Dibo Electronics Co.,LTD				名称/NAME	DB2ER-7.62-XXP

第一视角/FIRST ANGLE PROJECTION