REV	LOCATIONS	DESCRIPTION	DATE	REVISER	APPD

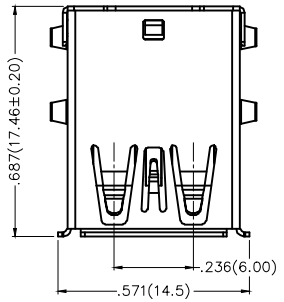

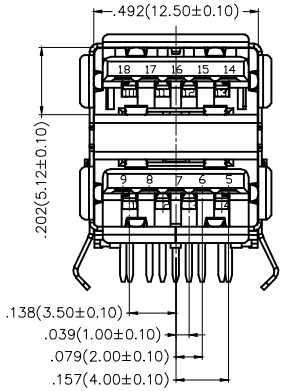

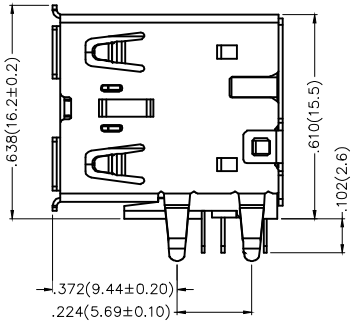

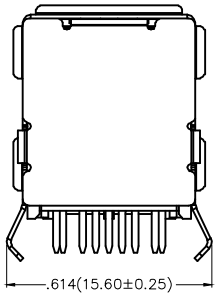

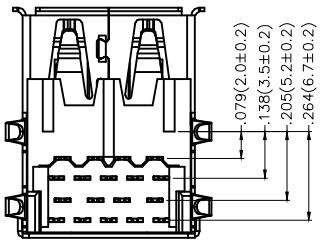

SPECIFICATIONS

Electrical
- Current Rating:
  - 1.8A AC(rms)/DC (VBUS and GND contacts)
  - 0.25A AC(rms)/DC (Other contacts)
- Voltage Rating : 30V AC(rms)/DC
- Contact Resistance:
  - 30mΩ Max (VBUS and GND contacts)
  - 50mΩ Max (Other contacts)
- Withstanding Voltage: 100V AC r.m.s
- Insulation Resistance: 100 MΩ Min
- Temperature Range–Operating: −55°C~+85°C

Mechanical
- Insertion force: 35N Max.
- Withdrawal force: 10N Min.
  8N Min after durability
- Durability: 5,000 cycles

Material
- Housing: PBT (UL 94V–0) Blue
- Terminal: Copper Alloy
- Shell: Brass

Plating
- Terminal: Gold in contact area, tin on tail
- Shell: Nickel Plated

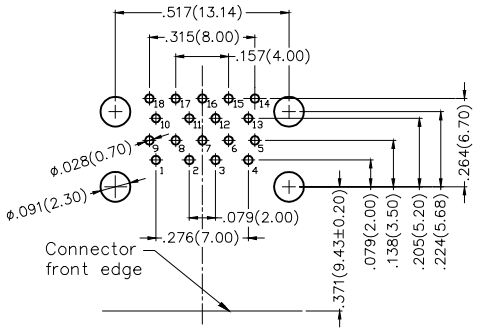

Recommended P.C.Board Layout

General tolerances: ±0.05mm

THIRD ANGLE PROJECTION	GENERAL TOLERANCES (UNLESS SPECIFIED)		APPROVE BY FRANK	DATE 13/APR/18	PART NO. FUS327–FDBU1K	ITEM NO. FUS327	TXGA Leader Of Industry
	X.±.012(0.30)	X.°±5°	CHECKED BY CHERRY	DATE 13/APR/18	TITLE USB A–type 9+9Circuits 90°Angle Female(DIP)(3.0)		
DESIGN UNITS Inch (metric)	X.X±.008(0.20)	.X°±2°				REV 0	SHEET NO. 1/1
	X.XX±.006(0.15)	.XX°±1°	DRAWN BY KATE	DATE 13/APR/18	THIS DRAWING CONTAINS INFORMATION THAT IS PROPRIETARY TO TXGA INDUSTRIAL ELECTRONICS(S.Z)CO.,LTD AND SHOULD NOT BE USED WITHOUT WRITTEN PERMISSION		
SCALE 5:1	SIZE A4	X.XXX±.004(0.10)	.XXX°±0.5°				