GENERAL TOLERANCE					
DIM. RANGE	0.5 ~ 3	> 3 ~ 6	> 6 ~ 30	> 30 ~ 120	> 120 ~ 400
TOLERANCE	±0.1	±0.1	±0.2	±0.3	±0.5

CUSTOMER DRAWING

REVISIONS		
REV	DESCRIPTION	DATE
A	PREMININARY REVISION	2016-08-03

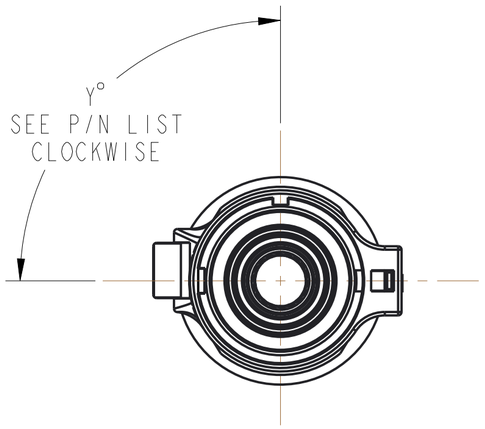

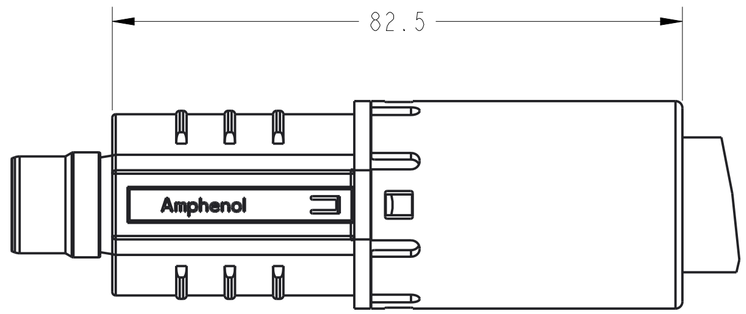

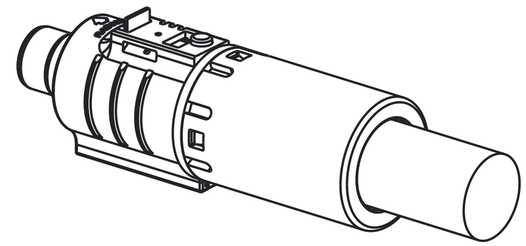

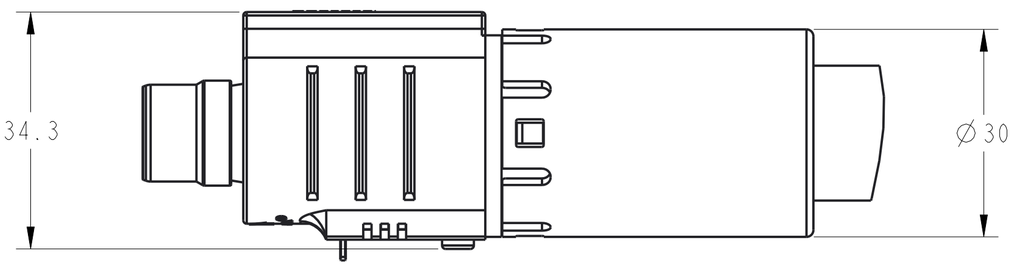

MFG PART NUMBER: C10-738727-( ) ( ) ( ) ( )

- BASE NUMBER
- COLOR OF BUTTON, SEE TABLE
- WIRE SIZE, SEE TABLE
- SEALING, SEE TABLE
- KEYWAY, SEE TABLE

CODE NUMBER REFERENCE: SLPIPB( ) B ( ) ( ) ( ) E H

- BASE NUMBER
- WIRE SIZE, SEE TABLE
- WITH BACKSHELL
- SEALING, SEE TABLE
- COLOR OF BUTTON, SEE TABLE
- KEYWAY, SEE TABLE
- EMI
- HVIL

ITEM	DESCRIPTION	CODE NUMBER	MFG NUMBER
COLOR OF BUTTON	ORANGE	1	O
	BLACK	2	B
	RED	3	R
WIRE SIZE	70 MM^2	7	70
	50 MM^2	5	50
	35 MM^2	3	35
SEALING	IP 67	0	S
	NO SEALING	1	N
KEYWAY (Y°)	90°	0	0
	270°	1	1
	60°	2	2
	120°	3	3
	150°	4	4

SPECIFICATIONS

CURRENT RATING	250 Amps MAX (C10-738727-X7XX) 200 Amps MAX (C10-738727-X5XX) 150 Amps MAX (C10-738727-X3XX)
OPERATING VOLTAGE	1000V DC/AC
OPERATING TEMPERATURE	-40°C-125°C
PROTECTION CLASS	IP67 (MATED)

NOTES:

1. THE REFERENCED PRODUCT IS IN COMPLIANCE WITH THE MAXIMUM CONCENTRATION VALUES(MCVS) AS SET BY ROHS 2.0 DIRECTIVE 2011/65/EU AND ANNEX II AMENDMENT DIRECTIVE (EU)2015/863.

THIS DOCUMENT CONTAINS PROPRIETARY INFORMATION AND SUCH INFORMATION MAY NOT BE DISCLOSED TO OTHERS FOR ANY PURPOSE OR USED FOR MANUFACTURING PURPOSES WITHOUT WRITTEN PERMISSION FROM THE AMPHENOL CORP.

N/A
NEXT ASSEMBLY
METRIC DOCUMENT

PRO/ENGINEER INFORMATION
Pro/e Model Used: 10-738727_ASSEM
Drawing Name: C10-738727_ABROAD

UNLESS OTHERWISE SPECIFIED
LINEAR DIMENSIONS ARE IN: MILLIMETERS
TOLERANCES:
ANGLES= ±2°
DEFAULT LINEAR TOLERANCES SEE TABLE
DIM.& TOL. PER ASME Y14.5M-1994;
DRM PER MIL-DTL-31000;
OTHER AMPHENOL STANDARDS: 9-9318
LEGENDS:
△=FLAG NOTE CALL OUT
REFERENCE ONLY

SPECIFICATIONS
MATERIAL SPEC.
N/A
PROCESS SPEC.
N/A

POS	QTY	PART NUMBER	DESCRIPTION	NOTE

PARTS LIST

APPROVALS		DATE
PREPARED BY	EVANS JIANG	OCT-03-16
ENGINEER IN CHARGE	ROB WENG	
DESIGN MANAGER	DERIC LI	
DESIGN ACTIVITY GROUP	C&I	

THIRD ANGLE PROJECTION

AMPHENOL INDUSTRIAL OPERATIONS
Amphenol Technology(Zhuhai)Co.,Ltd
No.63, Xinghan Road, Sanzao Town, Jinwan, Zhuhai, PRC

8.0MM SURLOK PLUS WITH EMI, INLINE PLUG

SIZE	CAGE CODE	DOCUMENT NO.	REV.
C	77820	C10-738727-( )	A

SCALE: 1.0 | REF. N/A | SHEET 1 OF 1

DOCUMENT NO. C10-738727-( ) SHEET 1 OF 1 REV. A

DOCUMENT NO. C10-738727-( ) SHEET 1 OF 1 REV. A

DOCUMENT NO. C10-738727-( ) SHEET 1 OF 1 REV. A

FORMAT: C-L-E-Rev.B