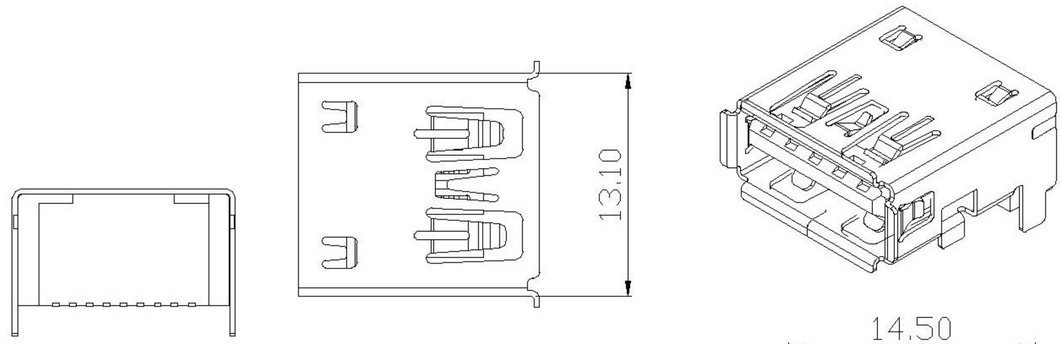

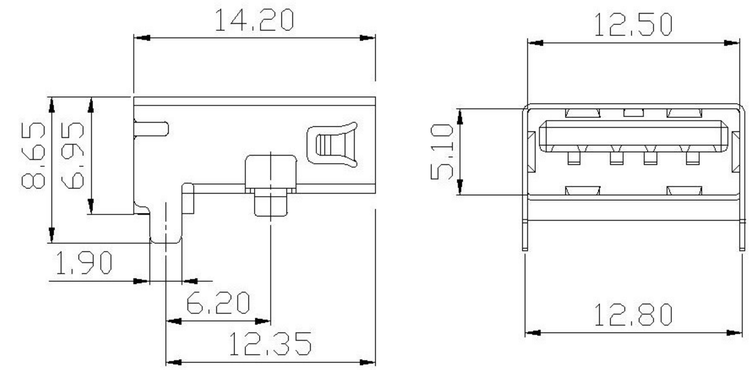

Flat (F)

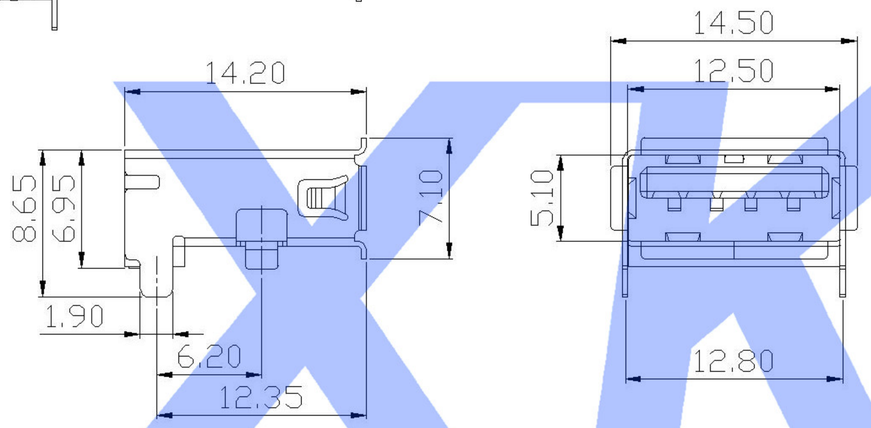

Pin #	SIGNAL NAME	DESCRIPTION	MATING SEQUENCE
1	VBUS	POWER	SECOND
2	D-	USB 2.0 DIFFERENTIAL PAIR	THIRD
3	D+		
4	GND	GROUND FOR POWER RETURN	SECOND
5	StdA_SSRX-	SUPERSPEED RECEIVER DIFFERENTIAL PAIR	LAST
6	StdA_SSRX+		
7	GND_DRAIN	GROUND FOR SIGNAL RETURN	
8	StdA_SSTX-	SUPERSPEED TRANSMITTER DIFFERENTIAL PAIR	
9	StdA_SSTX+		
Shell	Shield	CONNECTOR METAL SHELL	FIRST

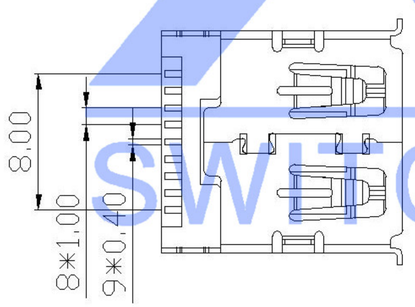

Scrolls (S)

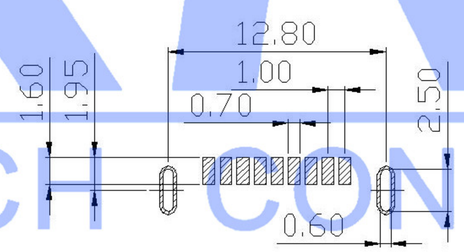

PCB

Material
Housing Material: LCP, UL94V-0, blue
Contact Terminal: Copper Alloy
Metallic Shell:SPCC
Plating
Underplating: Nickel
Contact Plating: 1μ" Gold
Solder Tail: 100μ" Min. Tin
Metallic Shell: Nickel
Electrical
Voltage Rating: 100 V AC
Current Rating: 0.25A (Signal pins 2,3,5,6,7,8,9) 1.8A (Power Pins 1,4)
Contact Resistance: 30mΩ Max.
Insulation resistance: 1000MΩ Min.
Dielectric withstanding voltage: 100V AC/Minute
Mechanical
Durability: 1500 cycles
Mating Force: 35N (3.57Kgf) Max
Unmating Force: 10N (1.02Kgf) Min. initial, 8N min after test
Environmental and Processing
Operating Temperature: -40°C to +85°C

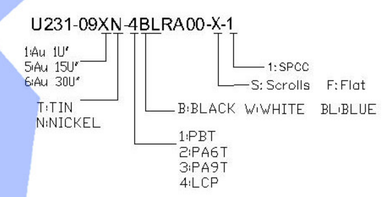

XKB SWITCH CONNECTOR

MARK	DESCRIPTION	DATE	REVISED	APPROVED
△X				
△X				
△X				

REVISIONS

ANGLAR	±5°
L≤4	±0.2
4<L≤16	±0.3
16<L≤63	±0.4
L>63	±0.5

UNSPECIFIED TOLERANCES

www.xk-dg.cn www.helloxkb.com www.helloxkb.cn

DSND		DATE		SCALE: N/A	MODEL TYPE: USB 3.0
DWN		DATE		VIEW:	PART NO.:
CHKD		DATE		UNIT: mm	DWG NO.: U231-09XN-4BLRA00-X-1
APPD		DATE		SIZE: A4	

XKB INDUSTRIAL PRECISION CO.,LIMITED

WEIGHT	SHEET	REVISION
1.0g	1/1	A0