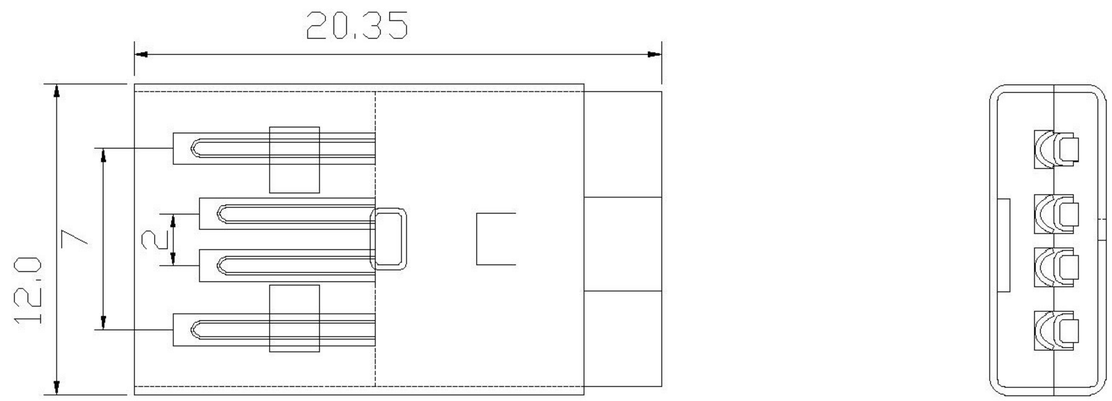

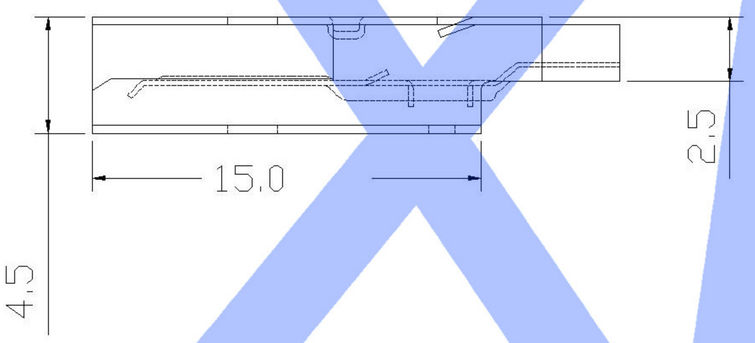

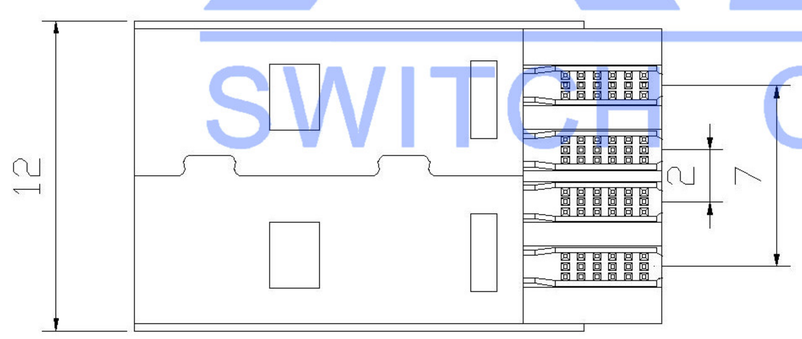

Housing Material : PBT UL94V-0, black/White
Contact Terminal : Brass,
Metallic Shell : Brass, Nicke

U216-04XN-1XS82-X

1:SPCC 5:BRASS

1:Au 1U"
6:Au 30U"

B:Black W: White

1:PBT
2:PA6T
3:PA9T
4:LCP

XKB SWITCH CONNECTOR

MARK	DESCRIPTION	DATE	REVISED	APPROVED
△X				
△X				
△X				

REVISIONS

ANGLAR	±5°
L≤4	±0.2
4<L≤16	±0.3
16<L≤63	±0.4
L>63	±0.5

UNSPECIFIED TOLERANCES

www.xk-dg.cn www.helloxkb.com www.helloxkb.cn

DSND		DATE		SCALE: N/A	MODEL TYPE: USB 2.0
DWN		DATE		VIEW:	PART NO.:
CHKD		DATE		UNIT: mm	DWG NO.: U216-04XN-1XS82-X
APPD		DATE		SIZE: A4	

XKB INDUSTRIAL PRECISION CO.,LIMITED

WEIGHT	SHEET	REVISION
1.0g	1/1	A0