RoHS

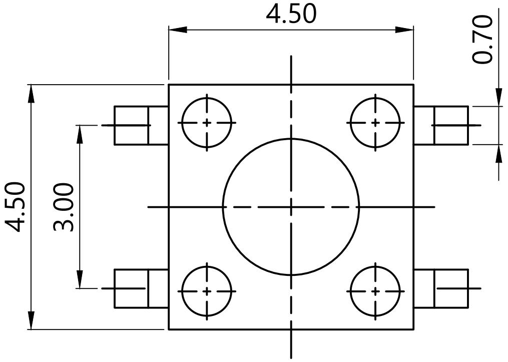

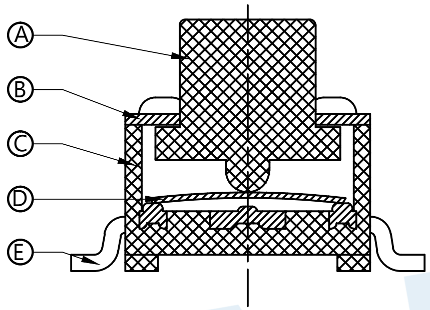

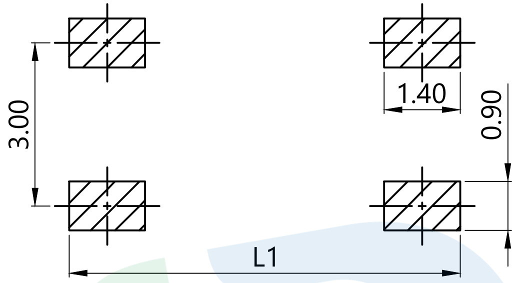

PCB Layout(Pattern Side)

OPERATING FORCE	
CODE	VIGOR
B1	120±30gf
B2	180±30gf
B3	250±30gf

FOOT PITCH		
CODE	L	L1
C1	6.8	7.8
C2	7.5	8.5

SHRAPNEL	
CODE	MATERIAL/QTY
D2	SUS/1PCS
D4	SUS/2PCS

TOTAL HEIGHT			
CODE	H	CODE	H
A1	3.5	A8	6.5
A2	3.8	A9	7.0
A3	4.3	A10	7.5
A4	4.5	A11	8.0
A5	5.0	A12	9.0
A6	5.5	A13	10
A7	6.0		

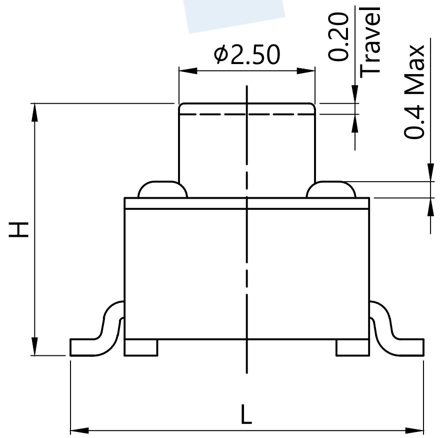

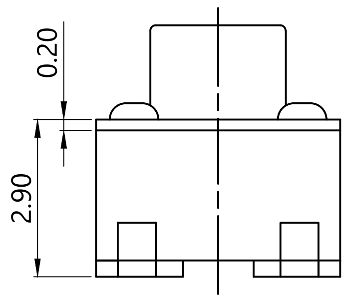

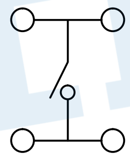

Circuit diagram

NO.	Name	Number	Qty	Materil	Remarks
E	Terminal		4	Brass	Silvering
D	Reed		1	SUS	Silver covered
C	Base		1	PA66	Black
B	Cover		1	SPCC	Nickel Plating
A	Keystoke		1	PA66	Black

YUANDI® 元迪 Yuandi Electronics Co,Ltd

angle	±2°	
10~30	±0.30	
5~10	±0.20	
~ 5	±0.10	
Tolerance not specified		

modify | Review | Approved

design		date	
Review		date	
Approved		date	
Drawing number:			
Proportion	1:1	unit	mm
gape number		A4	

name: TACT SWITCHS

name: TS-1091S-A□B□-C□D□