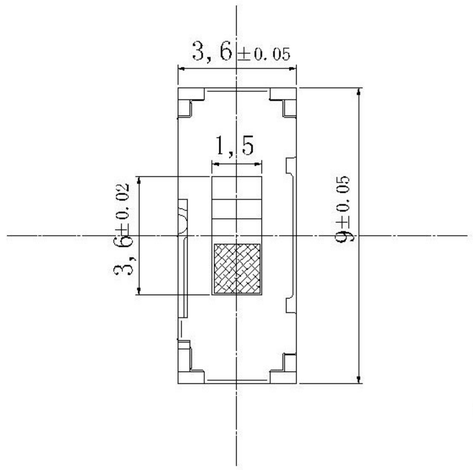

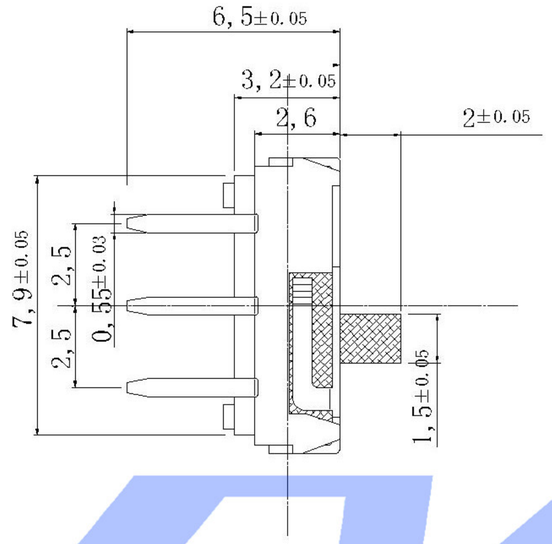

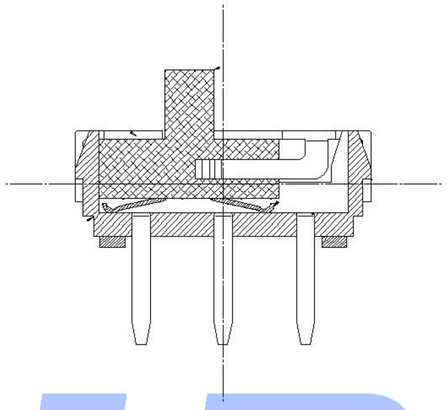

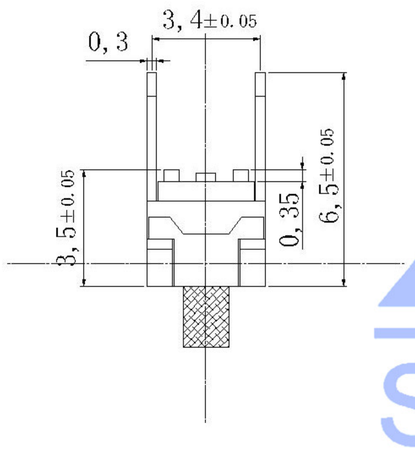

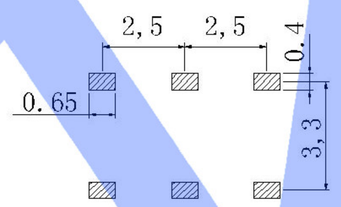

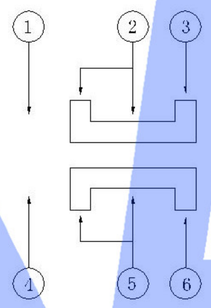

NOTE:
Rating: DC 12V 50mA
Operating Force:200±100gf
Lifetime:10,000 Cycles

XKB
SWITCH CONNECTOR

PAPT NO	L
SS-3235D-02-L1	2.0
SS-3235D-02-L2	3.0
SS-3235D-02-L3	4.0

ITEM	PAPT NAME	TER,NO	QTY	MATERIAL	FINISHING	REMARK
⑤	Terminal	——	6	Brass（0.30t）	ag Plated	
④	Contact spring	——	1	Phosphor branze	ag Plated	
③	Base	——	1	Pa46	Black	
②	Cover	——	1	Sus	Natural	
①	Keystake	——	1	Pa46	Black	

MARK	DESCRIPTION	DATE	REVISED	APPROVED
△X				
△X				
△X				

REVISIONS

UNSPECIFIED TOLERANCES	
ANGLAR	±5°
X.X	±0.2mm
X.XX	±0.1mm
X.XXX	±0.05mm

www.xk-dg.cn www.helloxkb.com www.helloxkb.cn

DSND		DATE		SCALE: N/A
DWN		DATE		VIEW:
CHKD		DATE		UNIT: mm
APPD		DATE		SIZE: A4

XKB INDUSTRIAL PRECISION CO.,LIMITED

MODEL TYPE: SLIDE SWITCH

PART NO.:

DWG NO.: SS-3235D-02-X

WEIGHT	SHEET	REVISION
1.0g	1/1	A0