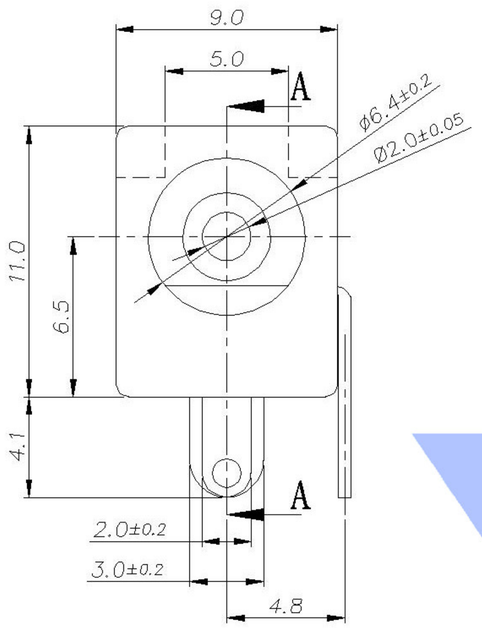

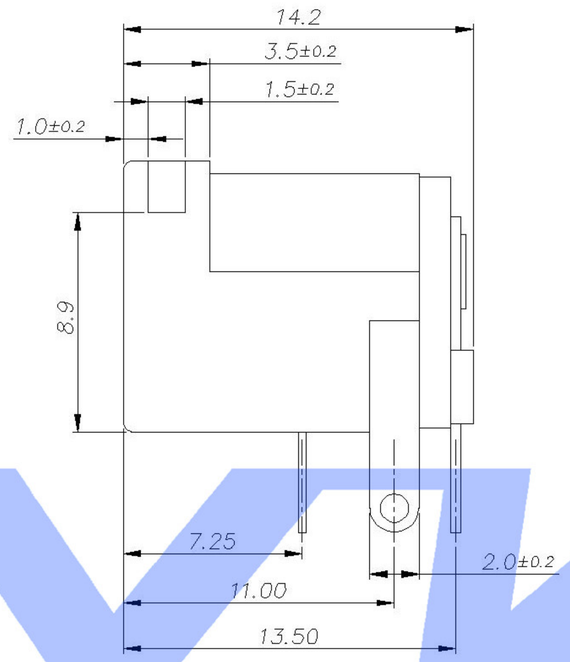

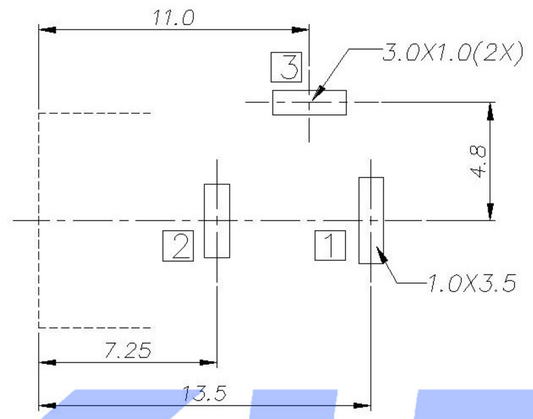

P. C. B. LAYOUT

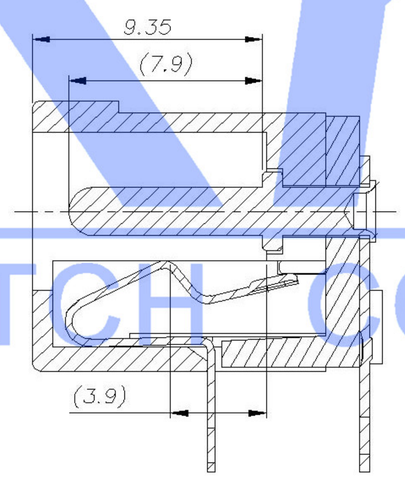

SECTION A-A

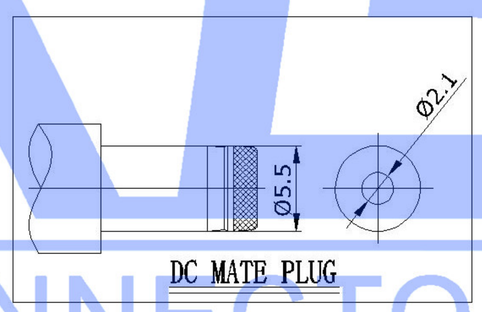

DC MATE PLUG

SCHEMATIC	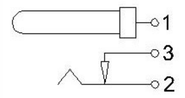
Model	DC-005B-5A
Center Pin	Ø1.65 mm
	Ø2.0 mm
	Ø2.5 mm

	MATERIAL	PLATING
center pin	Brass	tin
terminal 1	Brass	tin
terminal 2	Brass	tin
terminal 3	Brass	tin
plastic	Pbt	

XKB
SWITCH CONNECTOR

MARK	DESCRIPTION	DATE	REVISED	APPROVED
△X				
△X				
△X				

REVISIONS

UNSPECIFIED TOLERANCES	
ANGLAR	±5°
X.X	±0.2mm
X.XX	±0.1mm
X.XXX	±0.05mm

www.xk-dg.cn www.helloxkb.com www.helloxkb.cn

DSND		DATE		SCALE: N/A
DWN		DATE		VIEW:
CHKD		DATE		UNIT: mm
APPD		DATE		SIZE: A4

MODEL TYPE: DC POWER JACK

PART NO.:

DWG NO.: DC-005B-5A-2.0

XKB INDUSTRIAL PRECISION CO.,LIMITED

WEIGHT	SHEET	REVISION
1.0g	1/1	A0