MAPX	MODIFICATION	DATE

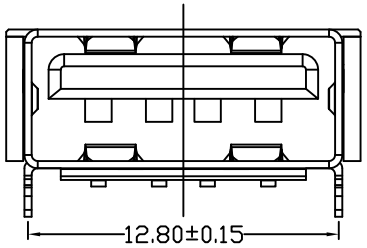

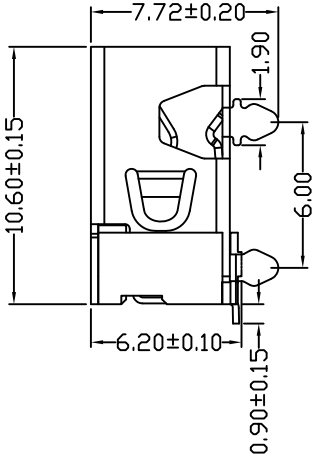

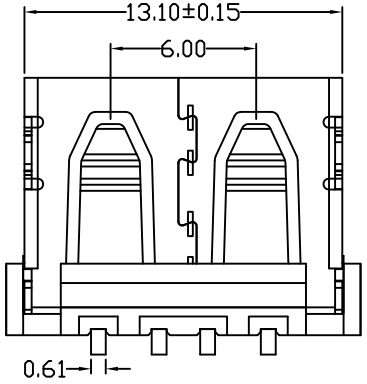

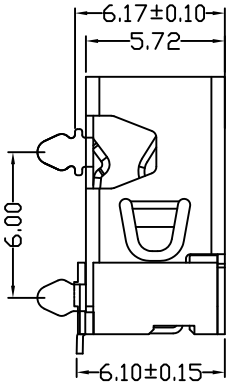

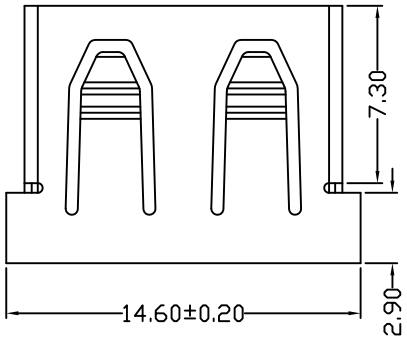

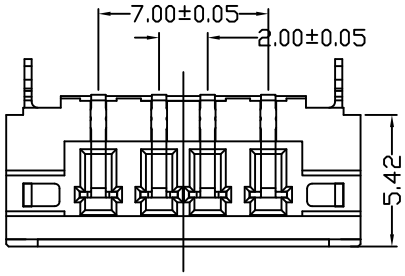

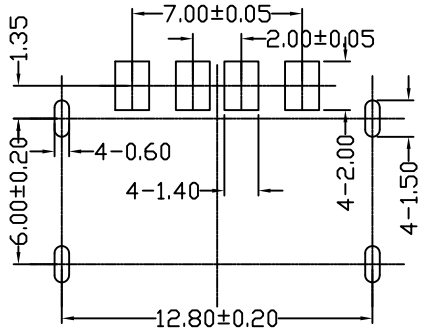

PCB HOLES

Specification:

1.Electrical Characteristics:

Dielectric Withstanding Voltage: AC 500V/1MINUTE.
Insulation Resistance: 1000 MΩ\Min.
Contact Resistance: 30 mΩ\ Max.

2.Mechanical Characteristics:

INSERTION FORCE: 30N(3.06Kgf) MAX
EXTRACTION FORCE: 10~30N(1.02~3.06Kgf)
Durability:1500cycles.EXTRACTION FORCE:10~30N(1.02~3.06Kgf)

3. Material:

Terminal: Phosphor Bronze, C5191/C2680R-EH T=0.25
Plating: Gold 0.76 um Min plating over 1.27 um Min Nickel underplate, 2.54 um Min Sn selective plating on solder tail;
Shell: Bronze, C2680R-H =0.30mm
Plating: Nickel underplate 2.54 um Min;
Housing: LCP Black

4.Environmental:

Operating Temperature: 0°C to +85°C.

产品图 PRODUCT CHART DWG				深圳市精拓金电子有限公司						
公差一览表 TOLERANCE UNLESS OTHERMSE				单位 UNITS	MM	制图 DRAWING	Z-Y-B	制图料号 PRODUCT PART NO.	914-441A2021S10200	
X.	±0.25	X.	±5.°	比例 SCALE	1:1	审核 CHKD		产品名称 PRODUCT NO.	AF10.6苹果款四脚尖弹铁壳 LCP黑胶SMT插拔力小	
.X	±0.20	.X	±2.°							
.XX	±0.15	.XX	±1.°	日期 DATE	2011.09.02	核准 APPD		角法 VIEW	版本 VER	A0
.XXX	±0.05	.XXX	±0.5°							