REV	DESCRIPTION	DRAWING	DATE
A	INITIAL RELEASE	LIZIRU	2021.03.24

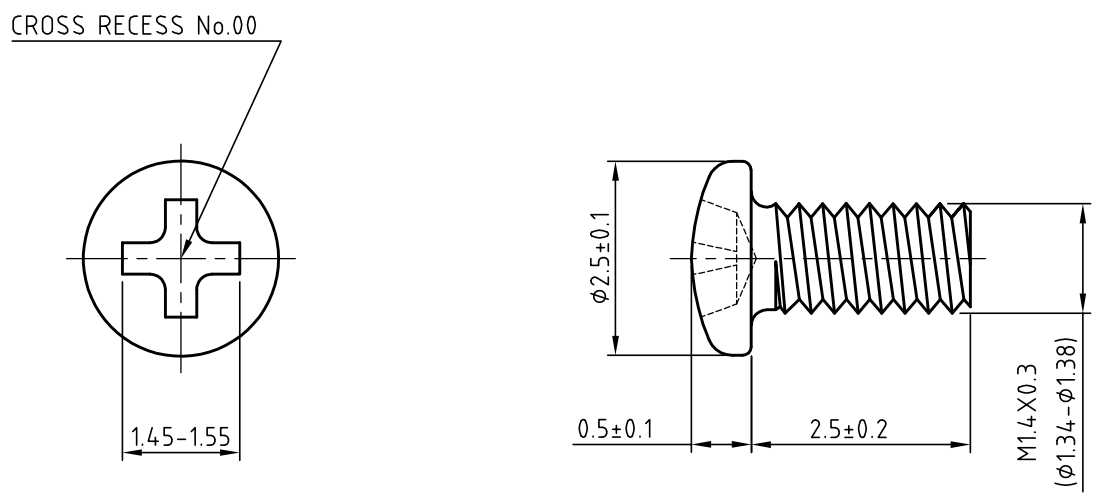

Shenzhen SS-innovation precision hardware CO.,LTD.

General tolerances for linear and angular dimensions without individual tolerance indications: ISO 2768-m	Third angle projection	Cust. Code		Name	Screw
		Material	SWRCH 18A	Description	PM1.4X2.5(HD=2.5;HT=0.5)
Drawing		Finish	Trivalent black zinc	Cust. P/N	Rev.
Checked		Unit	mm / Scale 10:1	F/N	1PM1.4X2.5X2.5X0.5-SLZ4L
Approval		Page	1 of 1	Draw. No	PL38-026 Rev. A