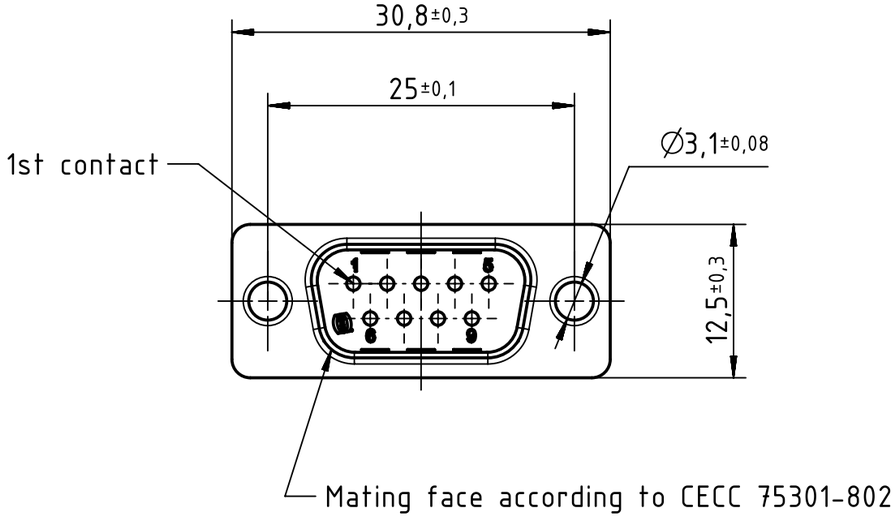

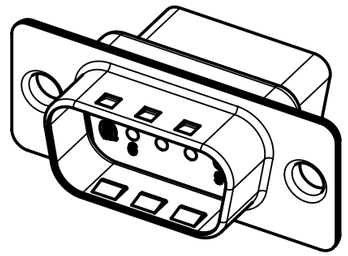

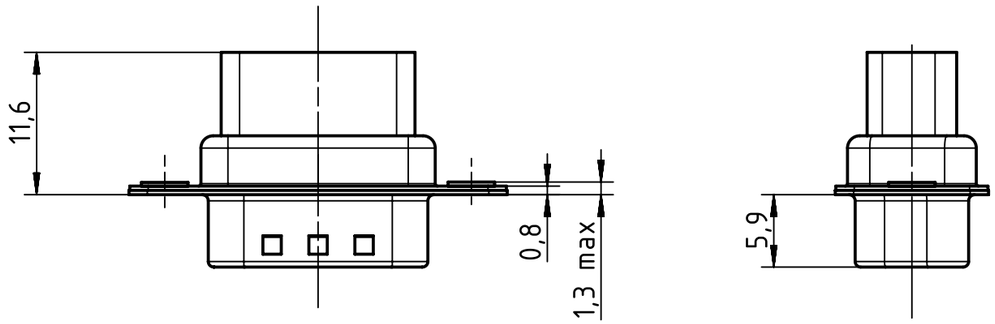

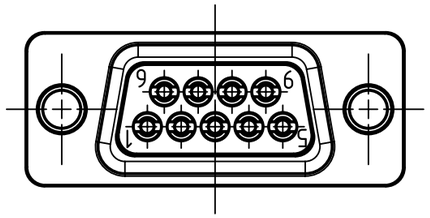

Rear mounting panel cut out

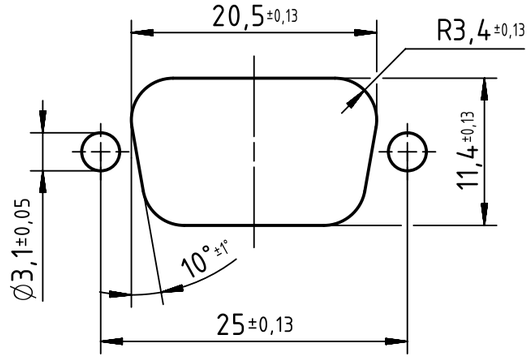

Front mounting panel cut out

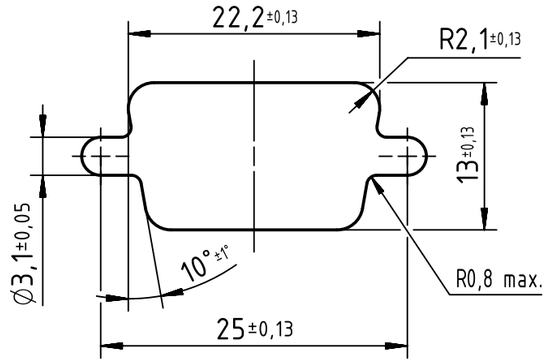

0967 009 5601 280	100pcs into one polybag
0967 009 5601	Standard packing in tray
Part number	Packing information

All Dimensions in mm
Original Size DIN A3

Scale 2:1 | Free size tol. | Ref. | Sub.

All rights reserved

Department EC PD - CN

HARTING Electronics GmbH
D-32339 Espelkamp

Created by	Inspected by	Standardisation	Date	State
ZHUANGJ	LUOK	KOHLER	2017-08-04	Final Release

Title: D-Sub crimp 09-pole male assembly

Doc-Key / ECM-Nr.: 100235516/UGD/001/C 500000123273

Type: TB | Number: 09670095601 | Rev.: C | Page: 1/1

A3