Alle Rechte vorbehalten/ *All rights reserved*

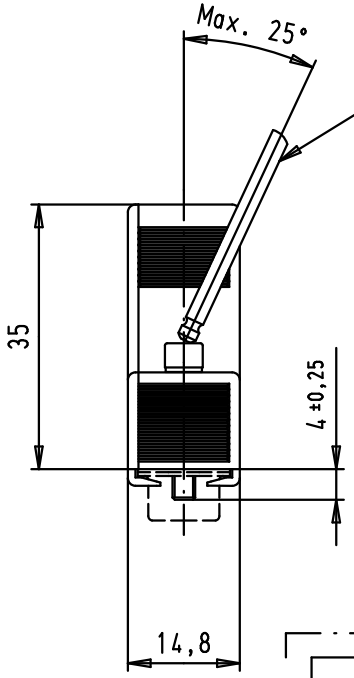

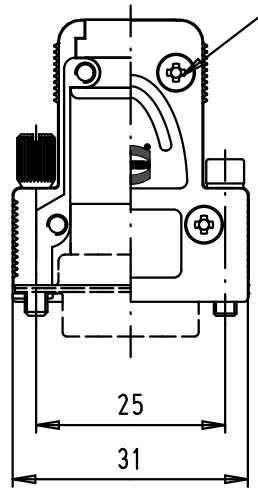

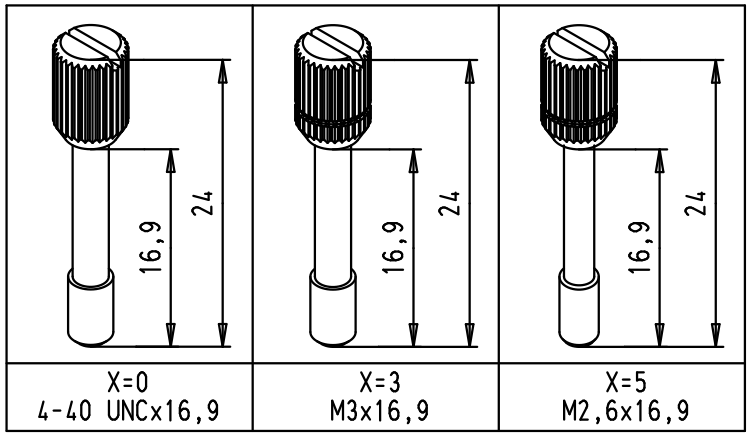

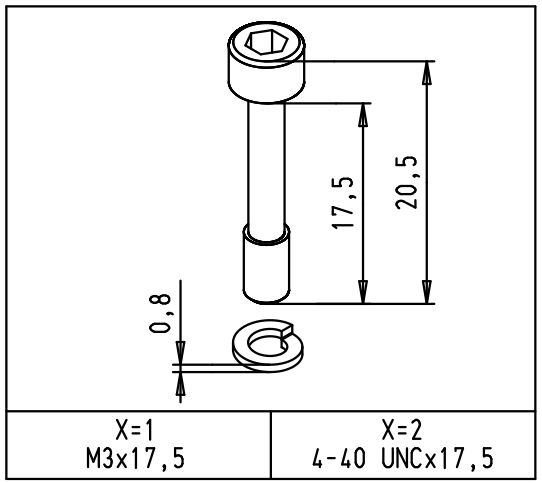

NOTA :Full metal hood made
with zinc diecast

Part number	Screw type	screw size	Mod.	Dat.	Name
61 03 001 X010					
61 03 001 5010	Knurled thumb screw	M2,6 x 16,9			
61 03 001 3010		M3 x 16,9			
61 03 001 0010		4-40 UNC x 16,9	36187	27/10/10	SC
61 03 001 2010	Cylinder socket head cap screw with spring washer [2,6 DIN 127B]	4-40 UNC x 17,5	36163	29/09/10	SC
61 03 001 1010		M3 x 17,5	32473	10/01/05	STRAUCH

	Dat.	Name
Detail.	14/08/03	STRAUCH
Insp.		
Stand.		

All Dim. in mm
Orig. Size DIN A 4

HARTING Electronics GmbH & Co. KG
D-32339 ESPELKAMP

INDUCOM - 9 poles, full metal hood
for D-Sub, straight cable entry

Maßstab/ *Scale* 1:1

TB 61 03 001 X010

Sub.

Blatt/ *Page* 1/1