REV	LOCATIONS	DESCRIPTION	DATE	REVISER	APPD

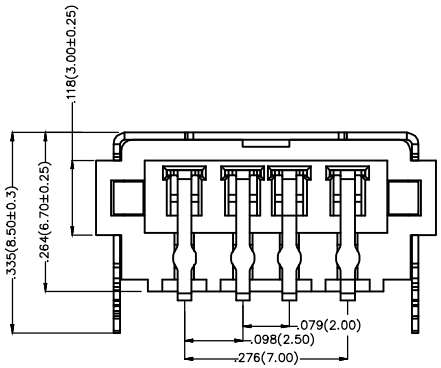

Electrical

Current Rating: 1.0A AC(rms)/DC
Voltage Rating: 30V AC(rms)/DC
Contact Resistance: 30 mΩ Max
Insulation Resistance: 1000 MΩ MIN
Withstanding Voltage: 500V AC r.m.s
Temperature Range–Operating: −55℃～+85℃
Durability: 5,000 cycles

Material and Plating

Housing: LCP (UL 94V–0)
Contact Pin: Copper alloy
Plating: Gold in contact area, Tin on tail.
Shell: Copper Alloy/ Nickel plated

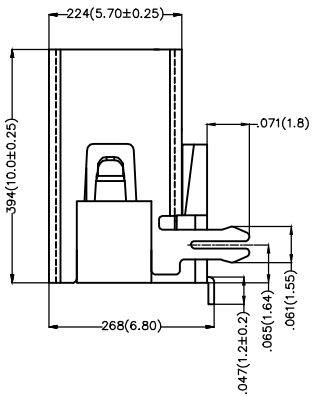

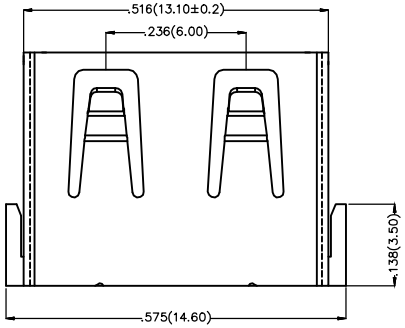

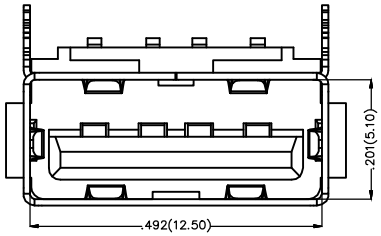

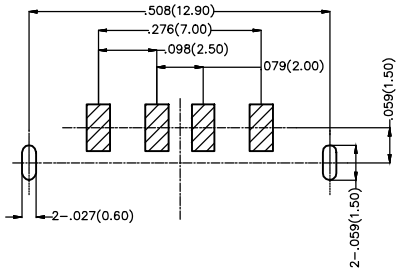

Recommended P.C.Board Layout

Tolerances: ±.002(±0.05)

THIRD ANGLE PROJECTION	GENERAL TOLERANCES (UNLESS SPECIFIED)		APPROVE BY FRANK	DATE 29/JUN/16	PART NO. FUS256–FSBK6K	ITEM NO. FUS256	TXGA Leader Of Industry
DESIGN UNITS Inch (metric)	X.±.012(0.30)	X.°±5°	CHECKED BY KEVIN	DATE 29/JUN/16	TITLE USB A–type 4Circuits 90°Angle Female(SMT)		REV 0 / SHEET NO. 1/1
	X.X±.008(0.20)	.X°±2°					
	X.XX±.006(0.15)	.XX°±1°	DRAWN BY CHERRY	DATE 29/JUN/16	THIS DRAWING CONTAINS INFORMATION THAT IS PROPRIETARY TO TXGA INDUSTRIAL ELECTRONICS(S.Z)CO.,LTD AND SHOULD NOT BE USED WITHOUT WRITTEN PERMISSION		
SCALE 5:1 / SIZE A4	X.XXX±.004(0.10)	.XXX°±0.5°					