D款，反向10.6前两脚,DIP-*6.50

MAPX	MODIFICATION	DATE

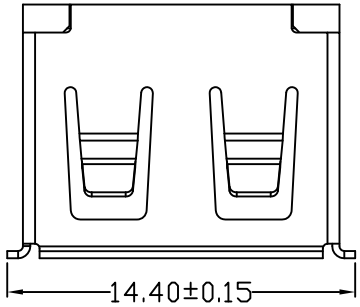

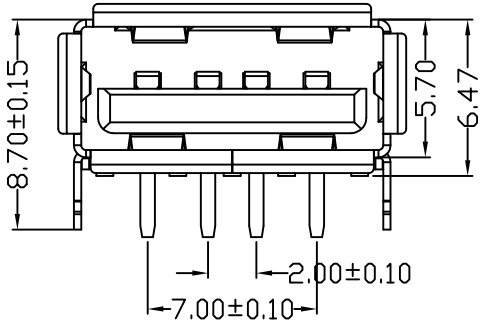

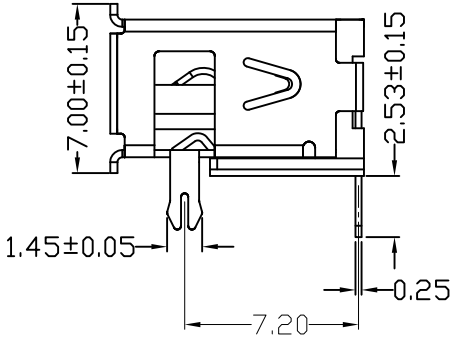

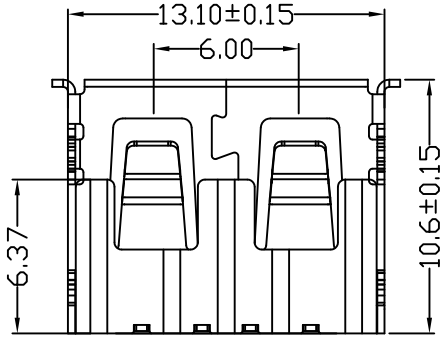

NOTES:
1.HOUSING: SEE NOTES, UL94V-0 .
TERMINAL: SEE NOTES.
SHELL: SEE NOTES.

SPECIFICATION:
1.ELECTRICAL CHARACTERISTIC:
CONTACT RESISTANCE: 30MΩ MAX
DIELECTRIC WITHSTANDING VOLTAGE: 500V AC FOR 1MIN
INSULATION RESISTANCE: 1000MΩ MIN
2.MECHANICAL CHARACTERISTIC:
INSERTION FORCE: 35N(3.57KGF) MAX
EXTRACTION FORCE: 10~35N(1.02~3.57KGF)MIN
DURABILITY: 1500 CYCLES EXTRACTION FORCE:10~35N
5000 CYCLES MIN
5000 CYCLES EXTRACTION FORCE:3~35N
3.ENVIRONMENTAL:
OPERATING TEMPERATURE: -55℃+85℃
4.Contact finish:
01:Selective Gold Flash
02:Selective Gold 3U"
03:Selective Gold 5U"
04:Selective Gold 15U"
05:Selective Gold 30U"

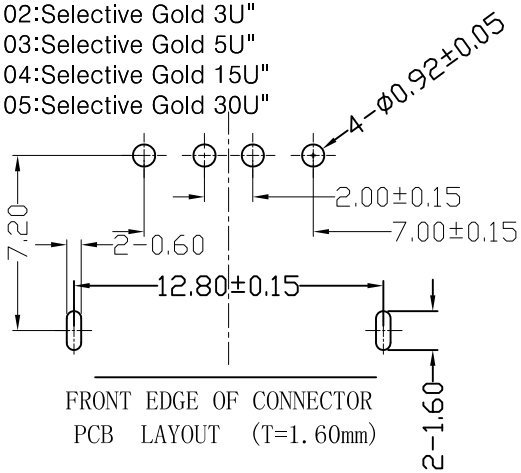

产品图 PRODUCT CHART DWG			
公差一览表 TOLERANCE UNLESS OTHERMSE			
X.	±0.25	X.	±5.°
.X	±0.20	.X	±2.°
.XX	±0.15	.XX	±1.°
.XXX	±0.10	.XXX	±0.5°

深圳市精拓金电子有限公司

单位 UNITS	MM	制图 DRAWING	Z-Y-B	制图料号 PRODUCT PART NO.	912-112A1027D10100
比例 SCALE	1:1	审核 CHKD		产品名称 PRODUCT NO.	AF10.6D款前两脚有边方弹铜壳PBT黑胶6.5DIP无耳朵
日期 DATE	2012.09.24	核准 APPD		角法 VIEW	版本 VER A0