目錄 MAPX	设变内容 MODIFICATION	日期 DATE

A/F无后盖有边弯脚/SMT（5.85）

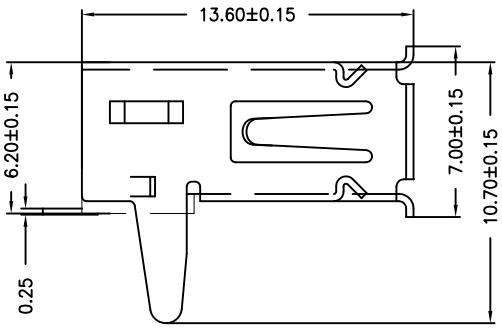

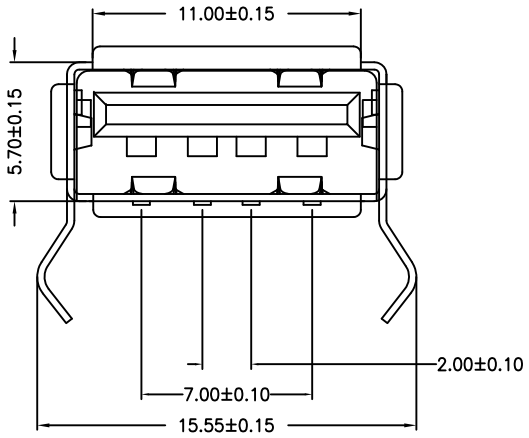

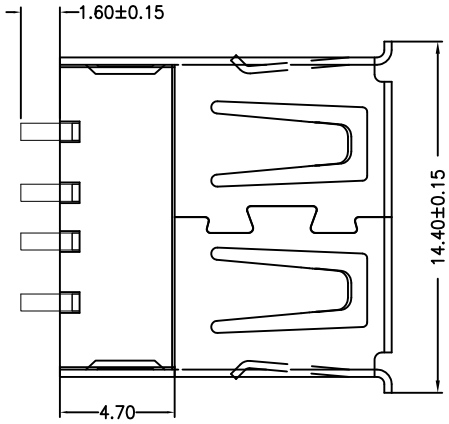

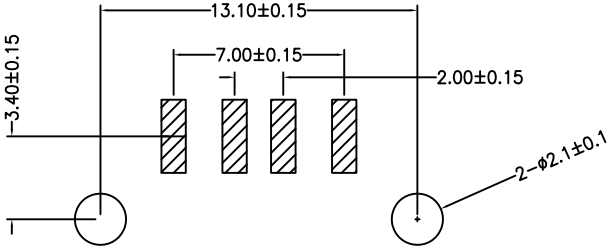

RBCOMMENDBD P.C.B PATTBRN LAYO UT

NOTES:
Housing: Thermoplastics,UL94V-0
Contact: Copper Alloy
Shell: Copper Alloy/Steel
Voltage Current Rating:1.5 AMP. 30V AC
Insulation Resistance:1000MΩ Min.
Contact Resistance:30 MΩ Max.
Dielectric Withstanding Voltage:500W AC
Temperature Range:-35℃ to +85℃
Insulator color: Black/White
Plastic material:PBT/LCP/Others
Shell finish:Nickel plated/Tin-Lead plated
Mechanical:
Mating Force:3.5KG MAX
Unmating Force:0.7 KG MIN.
Contact finish:
01:Selective Gold Flash
02:Selective Gold 3U"
03:Selective Gold 5U"
04:Selective Gold 15U"
05:Selective Gold 30U"

备注：侧弹分为外弹与内弹

产品图 PRODUCT CHART DWG				深圳市精拓金电子有限公司							
公差一览表 TOLERANCE UNLESS OTHERWISE				单位 UNITS	MM	制图 DRAWING	Z-Y-B	产品料号 PRODUCT PART NO.	903-132A1014S10100		
X.	±0.35	X°.	±5°	比例 SCALE	1:1	审核 CHKD	雷永键	产品名称 PRODUCT NO.	AF无后盖弯脚有边内弹改模后铜壳一型5.85PBT白胶SMT 高6.2		
.X	±0.25	.X°	±2°								
.XX	±0.15	.XX°	±1°								
.XXX	±0.10	.XXX°	±0.5°	日期 DATE		核准 APPD	雷永键	角法 VIEW		版本 VER	A0