Resistors

Low Resistance Metal Alloy Resistor

LRMA Series

- Resistance range 0.5mΩ to 500mΩ
- High temperature operation to 170°C
- Low thermal EMF version
- High power version
- Current sensing for power electronics
- RoHS compliant & halogen free
- AEC-Q200 qualified

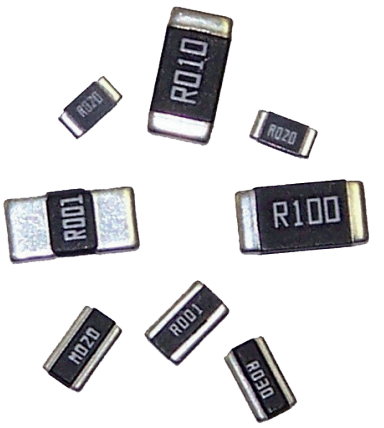

All parts are Pb-free and comply with EU Directive 2011/65/EU amended by (EU) 2015/863 (RoHS3)

Electrical Data

LRMA Version		T (Standard)		P (Power)
Size		2010	2512	2512
Power rating @70°C	W	1.5	≤R01: 2, >R01: 1	≤R10: 3, >R10: 2
Overload rating (5s)	W	7.5	≤R01: 10, >R01: 5	≤R10: 15, >R10: 10
Resistance range	mΩ	5 to 100	1 to 100	0.5 to 500
Standard values [1]	mΩ	5, 6, 10, 15, 20, 50, 100	1, 1.5, 2, 3, 3.5, 4, 5, 6, 7, 8, 10, 11, 12, 15, 18, 20, 25, 30, 33, 35, 40, 50, 100	0.5, 0.75, 1, 1.1, 1.5, 2, 2.5, 3, 4, 5, 6, 6.8, 7, 8, 9, 10, 11, 12, 15, 18, 20, 22, 25, 27, 30, 33, 39, 40, 45, 47, 50, 57, 60, 68, 70, 75, 80, 85, 90,100, 120, 130, 140, 150, 180, 200, 220, 240, 250, 270, 280, 300, 330, 390, 400, 500
Resistance tolerance[1]	%	1, 5		
TCR (25 to 125°C)	ppm/°C	≥R01: ±75	>R001 & <R01: ±100, ≤R001: ±275	<R001: ±200 ≥R001: ±50
Ambient temperature	°C	-55 to 170		
Insulation resistance	MΩ	>100		
Element alloy		Cu-Ni		Cu-Ni / Mn-Cu

LRMA Version		M (Low thermal EMF)			N (Inverse)		
Size		0805	1206	2512	0612	0815	1225
Power rating @70°C	W	0.5	1	≤R01: 2, >R01: 1	1 [2]		3
Overload rating (5s)	W	2.5	5	≤R01: 10, >R01: 5	5		15
Resistance range	mΩ	2 to 25	1 to 50	0.5 to 60	1 to 3	3 to 30	2 to 40
Standard values [1]	mΩ	1, 2, 3, 5, 6, 8, 9,10, 20, 25	1, 1.2, 2, 3, 4, 5, 6, 7, 8, 9, 10, 12, 14, 15, 18, 20, 22, 25, 30, 39, 40, 50	0.5, 0.75, 1, 1.5, 2, 3.5, 5, 10, 20, 25, 30, 40, 50, 60	1, 3	3, 4, 5, 10, 15, 20, 25, 30	2,3,4,5,10,15, 20,25,30,40
Resistance tolerance[1]	%	1, 5					
TCR (25 to 125°C)	ppm/°C	±100	±50	≥R01: ±75, >R001 & <R01: ±100 ≤R001: ±275	±100		
Ambient temperature		-55 to 170°C					
Insulation resistance	MΩ	>100					
Element alloy		Mn-Cu			Mn-Cu / Cu-Ni		

Notes: 1. Non-standard values and tighter tolerances may be available for high volume requirements. 2. Requires 300mm^2 copper pad & trace area

Physical Data (All dimensions in mm and nominal weight in mg)

Size	L	W	C	t	Wt
0805	2.0 ±0.1	1.25 ±0.1	0.4 ±0.2	0.6 ±0.2	5.5
0805 ≤R002			0.6 ±0.2		
1206 <R002	3.2 ±0.2	1.6 ±0.2	1.1 ±0.3	0.75 ±0.2	18.3
1206 ≥R002			0.5 ±0.3	0.6 ±0.2	
0612	1.7±0.2	3.2±0.2	0.4±0.2	0.6 ±0.2	12.9
0815	2.1 ±0.25	3.75 ±0.3	0.5 ±0.2	0.7 ±0.2	14.1
2010	5.0 ±0.2	2.5 ±0.2	0.6 ±0.3	0.6 ±0.2	35.6
2512 <R001	6.4 ±0.2	3.2 ±0.2	2.6 ±0.2	0.65 ±0.25	57 to 63
2512 ≥R001 & ≤R003[1]			2.0 ±0.2		
2512 >R003[1]			0.9 ±0.2		
1225	3.2 ±0.3	6.4 ±0.3	0.5 ±0.2	0.9 ±0.2	70

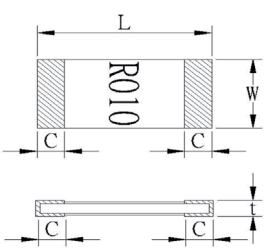

Note 1 - This applies to LRMAT2512 and LRMAM2512. For LRMAP2512 this threshold is R004

General Note

TT Electronics reserves the right to make changes in product specification without notice or liability.
All information is subject to TT Electronics' own data and is considered accurate at time of going to print.

BI Technologies IRC Welwyn

www.ttelectronics.com/resistors

© TT Electronics plc

Construction

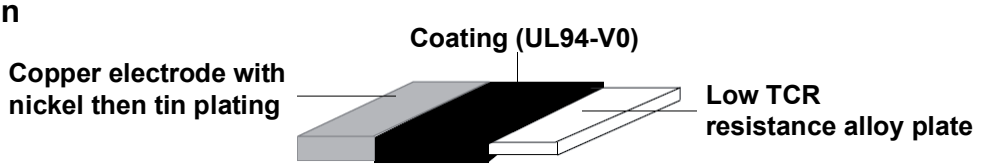

Marking

The components are marked with ohmic value, e.g. “R002” = 2mΩ, “R010” = 10 mΩ.
Due to space restrictions, for LRMAM1206-R001, "01" = 1mΩ is used, and for LRMAM0805, “2” = 2mΩ, “010” = 10 mΩ are used.

Solvent Resistance

The component is resistant to all normal industrial cleaning solvents suitable for printed circuits.

Performance Data

		Maximum (%)	Typical (%)
Load at rated power (cyclic load, 1000 hours at 70°C)	±ΔR	0805: 1.5 Others 1	0.3
Short term overload (5 x rated power for 5s)	±ΔR	0.5	0.15
Humidity (1000 hours, 85°C, 85%RH)	±ΔR	0805: 1 Others 0.5	0.15
Temperature cycle (-40 to +125°C, 1000 cycles, 15 minute dwell)	±ΔR	0805: 1 Others 0.5	0.15
Resistance to solder heat (260°C ±5°C for 20s ±1s)	±ΔR	0.5	0.3
Solderability (245°C ±5°C for 2s ±0.5s)		>95% coverage	
Dry heat (1000 hours at 170°C)	±ΔR	0805: 1.5 Others 0.5	0.3
Low temperature storage (1000 hours at -55°C)	±ΔR	0.5	0.15
Substrate bending (board 1.6mm, fulcrum spacing 90mm, deflection 2mm)	±ΔR	0805: 1 Others 0.5	0.3
Insulation resistance (1 minute @ 100Vdc)		>100M	

Thermal Performance & Mounting

Temperature Derating

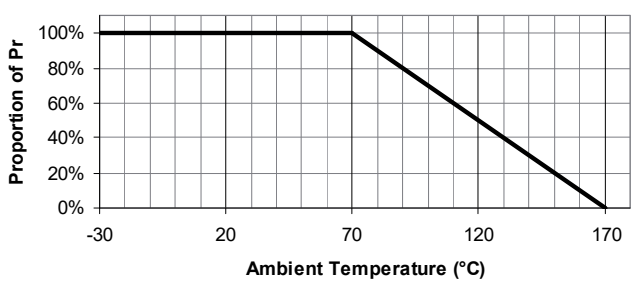

Typical Temperature Rise

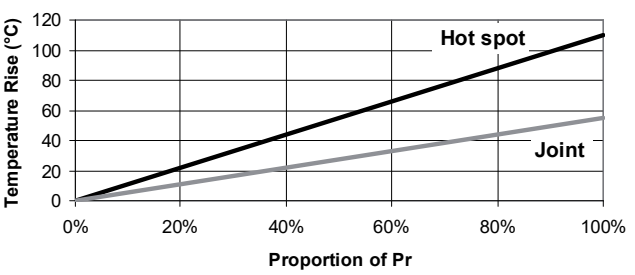

Reference Pad Dimensions (mm)

Size	a	b	L
0612	3.8	0.7	0.7
0805	1.4	1.15	1.2
1206 <R002	1.8	2.3	1.0
1206 ≥R002	1.8	1.7	1.6
0815	7.9	1.5	0.9
2010	3.4	1.5	3.5
2512 ≤R003[1]	4.0	3.1	1.3
2512 >R003[1]	4.0	2.1	4.1
1225	7.0	1.0	2.3

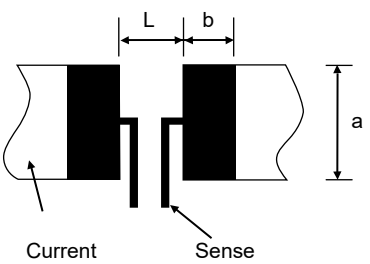

The temperature rise shown is highly dependent on mounting conditions. Reference conditions assume 20µ copper with thermal vias to multiple layers.
The self-heating in the current tracks should be kept negligible, or allowed for by temperature derating.

Note 1 - This applies to LRMAT2512 and LRMAM2512. For LRMAP2512 this threshold is R004

Standard 4-terminal probe pitches for measuring unmounted parts are 2.8 x 1.7mm (0612), 0.4 x 1.83mm (0805), 0.4 x 2.8mm (1206), 1.2 x 4.5mm (2010), 1.5 x 5.8mm (2512), and 5.4 x 3.4mm (1225). All probe location tolerances ±0.02mm.

General Note
TT Electronics reserves the right to make changes in product specification without notice or liability.
All information is subject to TT Electronics’ own data and is considered accurate at time of going to print.

© TT Electronics plc

Packaging

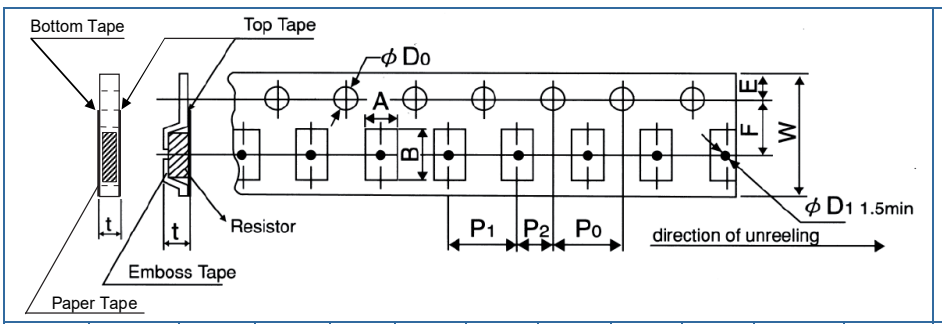

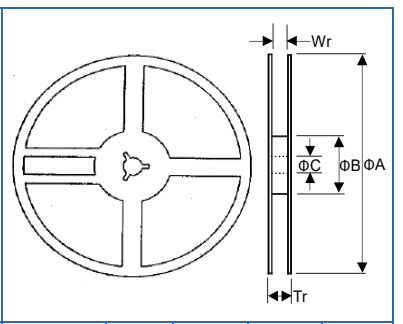

Size	Tape	A	B	W	F	E	P_1	P_2	P_0	ΦD_0	t	ΦA	ΦB	ΦC	Wr	Tr
0805	Paper	1.6 ±0.15	2.4 ±0.2	8.0 ±0.2	3.5 ±0.05	1.75 ±0.1	4.0 ±0.1	2.0 ±0.1	4.0 ±0.1	1.5 +0.1/-0	0.84 ±0.1	178 ± 2	60 ±1	13 ±1	9 ±1	11.4 ±1
0612, 1206	Paper	2.0 ±0.15	3.6 ±0.2	8.0 ±0.2	3.5 ±0.05	1.75 ±0.1	4.0 ±0.1	2.0 ±0.05	4.0 ±0.1	1.5 +0.1/-0	0.84 ±0.1	178 ± 2	60 ±1	13 ±1	9 ±1	11.5 ±1
0815	Emboss	2.6 ±0.2	4.5 ±0.2	12 ±0.2	5.5 ±0.1	1.75 ±0.1	4.0 +-0.1	2.0 ±0.2	4.0 ±0.1	1.55 ±0.05	1.1 ±0.1	178 ± 2	60 ±1	13 ±1	13 ±1	15.4 ±2
2010	Emboss	2.8 ±0.2	5.3 ±0.2	12 ±0.05	5.5 ±0.05	1.75 ±0.1	4.0 ±0.1	2.0 ±0.05	4.0 ±0.05	1.5 +0.1/-0	0.85 ±0.15	178 ± 2	60 ±1	13 ±1	13 ±1	15.4 ±2
2512 1225	Emboss	3.6 ±0.2	6.9 ±0.2	12 ±0.2	5.5 ±0.05	1.75 ±0.1	4.0 ±0.1	2.0 ±0.05	4.0 ±0.05	1.5 +0.1/-0	0.85 ±0.15	178 ± 2	60 ±1	13 ±1	13 ±1	15.4 ±2

Storage

Conditions: 5°C to 35°C and 40% to 75%RH
Shelf life: 2 years from manufacture

Processing

LRMA series resistors are suitable for both wave and IR reflow soldering. The recommended reflow profile for Pb-free SAC305 alloy (Sn 96.5%, Ag 3%, Cu 0.5%) soldering is as follows:

Pre-heat: 60s to 120s at 150°C to 180°C
Soldering: 20s to 40s at ≥230°C
Peak: 5s at 255°C to 260°C

Ordering Procedure

Example: LRMAM2512-R01FT4 (LRMA2512, low thermal EMF, 10 milliohms ±1%, Pb-free)

L	R	M	A	M	2	5	1	2	-[1]	R	0	1				F	T	4
1				2	3					4						5	6	

1 Type	2 Version		3 Size	4 Value	5 Tolerance	6 Packing		
LRMA	T	Standard	0612	3 to 6 characters	F = ±1%	Tape & reel		
	P	Power	0805		J = ±5%	T5	0612, 0805, 1206	5000/reel
	M	Low thermal EMF	1206	R = ohms		T4	0815, 2010, 2512, 1225	4000/reel
	N	Inverse	0815					
			2010					
			2512					
			1225					

Note 1: For values which require all 6 characters, e.g. R00075, the hyphen is omitted.

General Note
TT Electronics reserves the right to make changes in product specification without notice or liability.
All information is subject to TT Electronics' own data and is considered accurate at time of going to print.

© TT Electronics plc