CAD FILE:

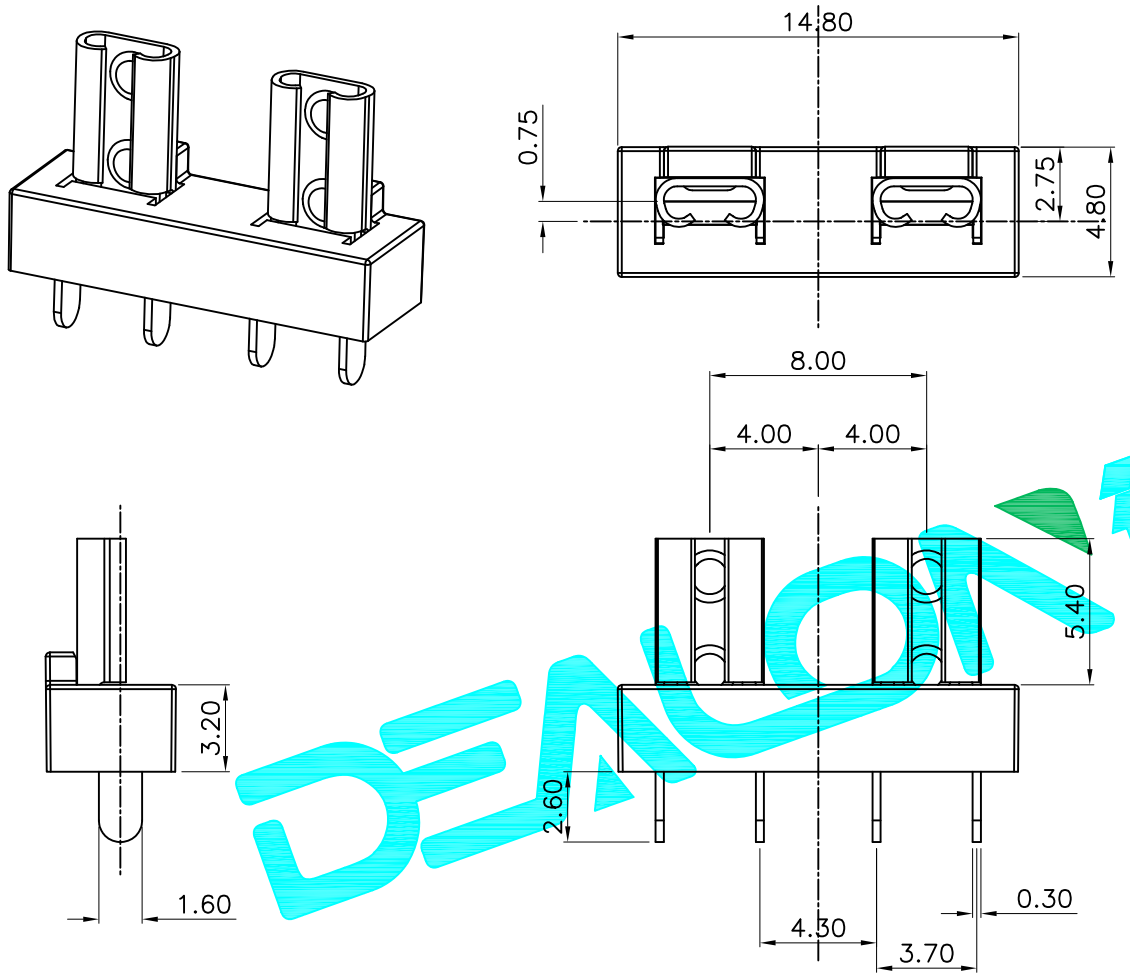

SPECIFICATIONS:
1.MATERIAL:
HOUSING:PBTBLACK30%GF:UL 94V-0
TERMINAL:110 SERIES COPPER ALLOY T=0.30mm
MATE:TAB=0.8
2.FINISH:
TERMINAL:MATTESn PLATED ALLOVER COPPER
3.ELECTRICAL
CONTACTRESISTANCE:50mΩMax
INSULATION RESISTANCE:100MΩ/500VDC Min
DIELECTRIC WITHSTANDING VOLTAGE:500VAC/Minuter
CURRENTRATING:15A/250VDC PER CONTACT MIN.
VOLTRGERATING:250VAC/DC(RMS)
4.MECHANICAL:
DURABILITY:500CYCLES Min INSERTION FORCE:3.5kgfMax
EXTRACTION FORCE:1.0kgfMin5ENVIROMENTAL
STORAGETEMPERATURE:-20°C~85℃

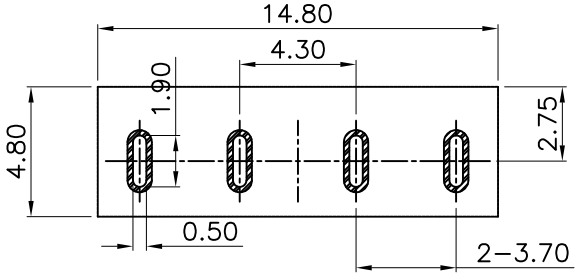

Recommended P.C.B Layout

							APPROVALS		DATE	DEALON 德之隆® ELECTRONICS CO.,LTD			
							DRAWN	G.M.Chen	2014/11/26				
							CHECKED			TITLE:	CONNECTOR		
							APPROVALS			PART NO.	BX505-33		
———	A	———	NEW	———	———	———	TOLERANCES ARE	30~以上 ±0.30	ANGLE	UNIT: mm	SCALE: 1:1	SHEET 1 OF 1	
								10~30 ±0.20					
ECN NO.	REV.	DATE.	DESCRIPTION.	CHANGE.	CHECK.	APPRO.		5~10 ±0.15	±2°	DRAWING NO.	———	PROJ:	
								~ 5 ±0.10					