HAOYU

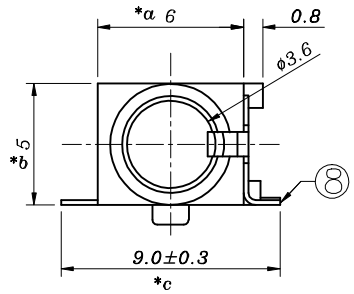

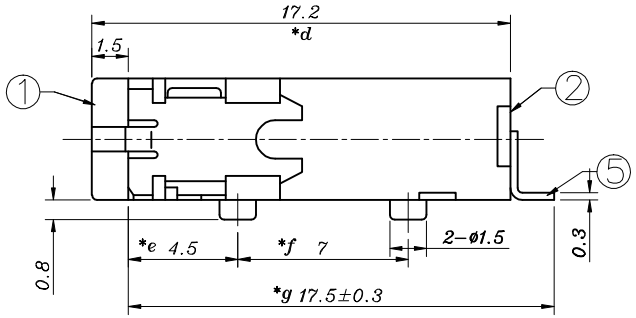

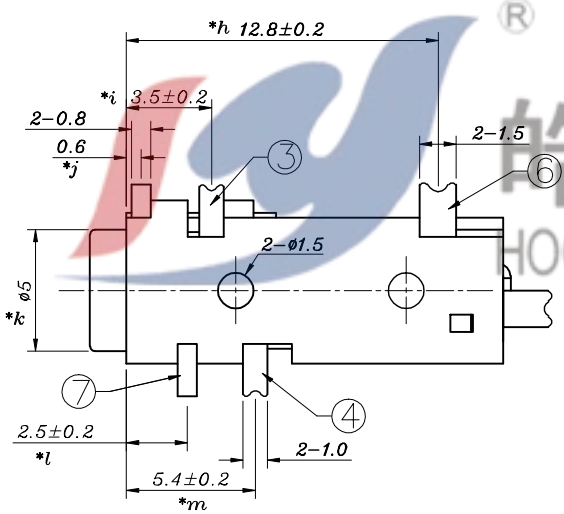

P.C.B LAYOUT
TOP VIEW

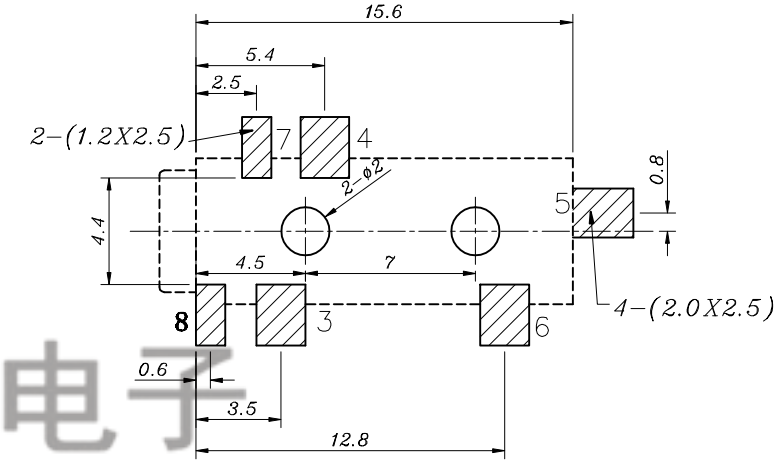

皓宇电子
HOOYA ELECTRONICS

SCHEMATIC

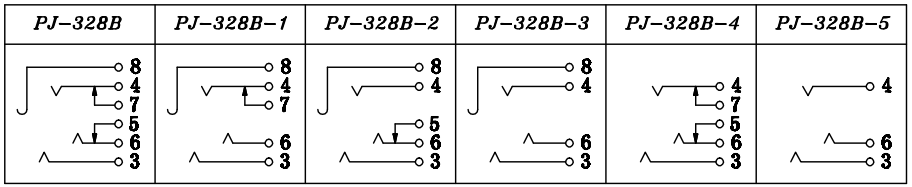

NO.	PART NAME	MATERIAL	QTY	FINISHING
8	CONTACT FOOT	PHOSPHOR BRONZE	1	Au/Ag-PLATED
7	CURVE PIECE	BRASS	1	Au/Ag-PLATED
6	SPRING	PHOSPHOR BRONZE	1	Au/Ag-PLATED
5	CURVE PIECE	BRASS	1	Au/Ag-PLATED
4	CONTACT FOOT	PHOSPHOR BRONZE	1	Au/Ag-PLATED
3	CONTACT FOOT	PHOSPHOR BRONZE	1	Au/Ag-PLATED
2	COVER	PA6T	1	BLACK
1	CASE	PA6T	1	BLACK

TOLERANCE UNLESS SPECIFIED
UP TO 5mm: ±0.1
ABOVE 5mm: ±0.2
ANGULAR ±1°

NO	DATE	REVISIONS	BY	APPD
1				

TITLE: PHONE JACK
MODEL: PJ-328B
UNIT : MM
SCALE: 1:1
ROHS COMPLIANT

HOOYA ELECTRONIC CO. LTD
皓宇电子有限公司

DWN
CHK'D
APPD
PRO.AGL:
REV :A0