Transmittal, reproduction, dissemination and/or editing of this document as well as utilization of its contents and communication thereof to others without express authorization are prohibited.
未经允许禁止传输、复制、编辑该文档，以及利用其内容进行交流

REVISION RECORD				
REV	ECN	DESCRIPTION	DRFT	DATE
1	DCN0006226	图纸更新	董方正	2020/1/07

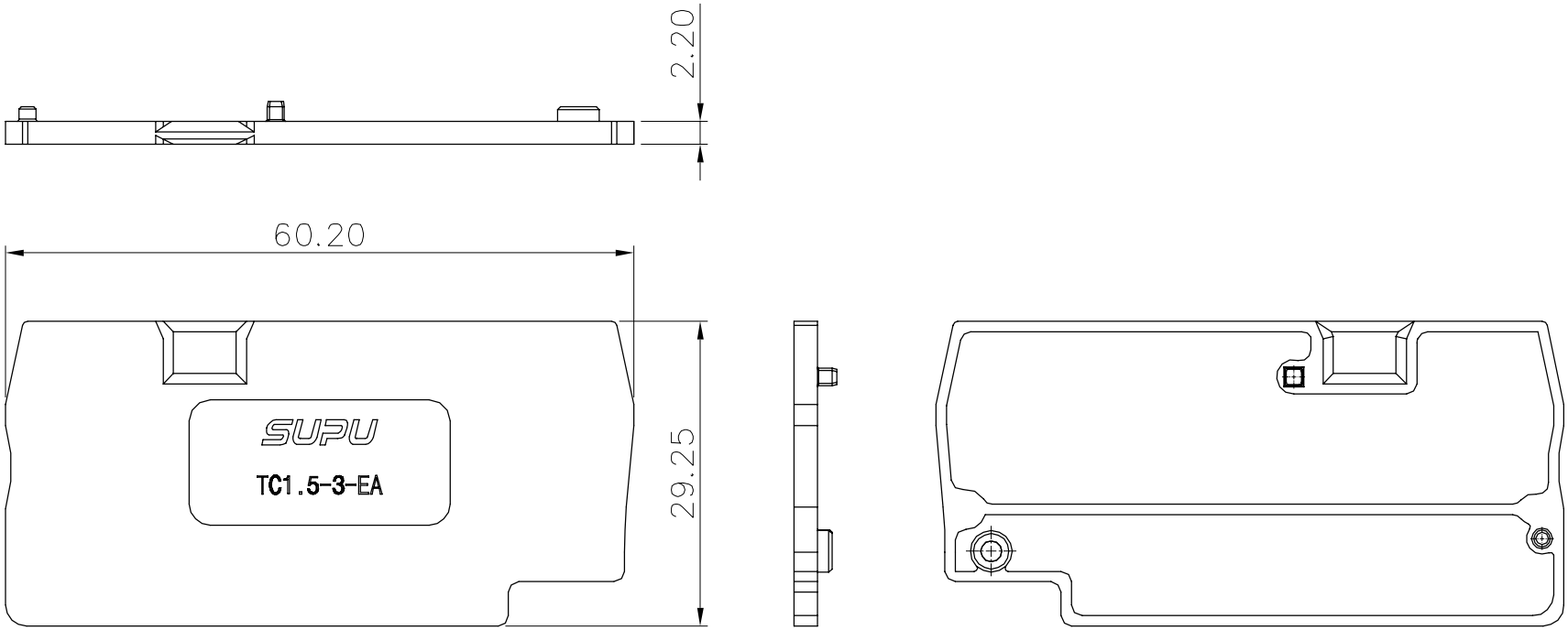

HOW TO ORDER:
TC1.5-3-XX-EA

- TC1.5-3: Sereies No.
- XX: Color: GY: Grey, BU: Blue, OG: Orange
- EA: Sereies No.

NOTES:
Material:

Insulator	PA66	UL94 V-0

General information:
1. Dimension shall be interpreted per ASME Y14.5-2009
2. Operating temperature: -40℃~+105℃
3. RoHS Compliance
4. Undimensioned Tolerances:

Pitch Range In mm			Nominal Dimension Range In mm					— ⌒ ▱
TO 6	Over 6 TO 10	Over 10 TO 24	TO 30	Over 30 TO 60	Over 60 TO 100	Over 100 TO 150	Over 150	0.1/10
								∠
±0.15	±0.20	±0.30	±0.30	±0.50	±0.70	±1.00	±1.30	±2°

订货号 Order No.	TC1.5-3-XX-EA		名称 Name	TC系列笼式弹簧 1.5mm² 一进两出接线端子端板	未注公差 Tolerance		表面 Surfaace	
项目 Item	签字 Signature	日期 Date			Tolerances Table		VDI21	
设计 Design	dfz	01/06/20″	图号 Drawing No.	PRM000989	阶段标记 Progress	版本 Revision	重量 Weight	比例 Scale
审核 Check	cw	01/06/20″	材料 Material	Notes	M	1	/	1:1
工艺 Process	-	-	物料号 Item No.	411514004	第1页/共1页 1 of 1		mm	
标准化 Unify	-	-		411514005	SUPU 宁波速普电子有限公司 NINGBO SUPU ELECTRONICS CO.,LTD.			
批准 Approve	lwl	01/06/20″		411514006				

借通用件登记 Common Part
原图号 Old Draw. No.
底图总号 Assembly No.