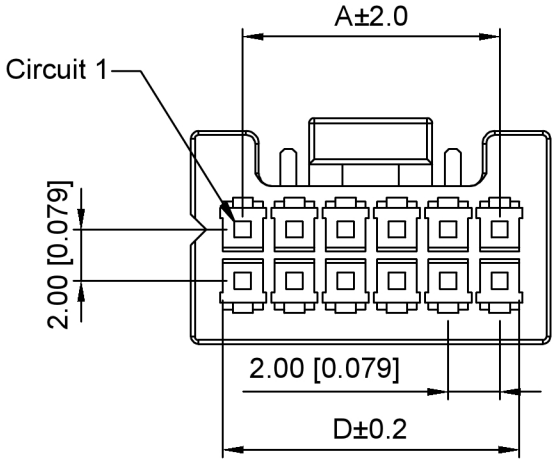

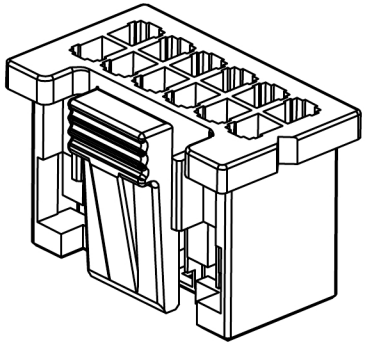

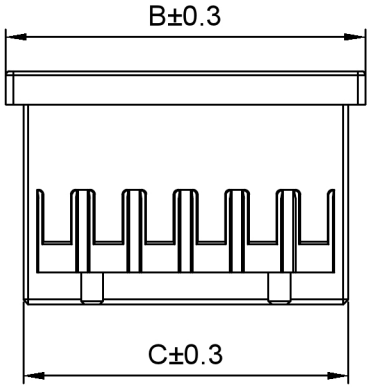

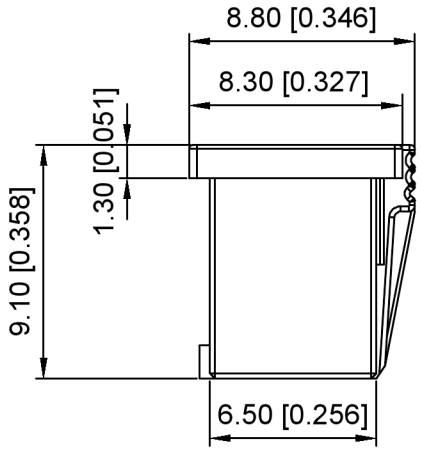

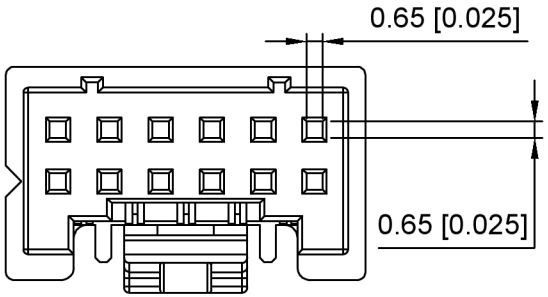

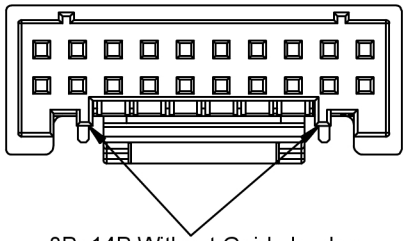

8P~14P Without Guide buulge
16P~40P With Guide buulge

Scale:1/0.8

■ Specifications:

- Votage rating:250V AC/DC
- Current rating：2. 5-1.0A AC/DC
- Withstanding voltage:800V AC/minute
- Temperature range:-25℃~+85℃
- Insulation resistance:≥1000MΩ
- Contact resistance:≤10mΩ
- After environmental testing:≤20mΩ

X2006 H - 2*XX -N0 HF
① ② ③ ④ ⑤

① XKB Series No.
② Category:H-HSG
③ Row No.-pin No.:2*XX-04P~20P
④ Material:N0-PA66 94V-0
⑤ HF-Halogen free

Poles	Dimensions(mm)				Poles	Dimensions(mm)			
	A	B	C	D		A	B	C	D
2*04	6.00	10.00	8.65	7.55	2*13	24.00	28.00	26.65	25.55
2*05	8.00	12.00	10.65	9.55	2*14	26.00	30.00	28.65	27.55
2*06	10.00	14.00	12.65	11.55	2*15	28.00	32.00	30.65	29.55
2*07	12.00	16.00	14.65	13.55	2*16	30.00	34.00	32.65	31.55
2*08	14.00	18.00	16.65	15,55	2*17	32.00	36.00	34.65	33,55
2*09	16.00	20.00	18.65	17.55	2*18	34.00	38.00	36.65	35.55
2*10	18.00	22.00	20.65	19.55	2*19	36.00	40.00	38.65	37.55
2*11	20.00	24.00	22.65	21.55	2*20	38.00	42.00	40.65	39.55
2*12	22.00	26.00	24.65	23.55					

X2006H-2*XX-N0HF	PA66 UL 94V-0	X2006T	X2006W
PART N0	Material	Suitable XKB Terminal	Suitable XKB Terminal

广东星坤科技股份有限公司
签名 日期
文件工程章

MARK	DESCRIPTION	DATE	REVISED	APPROVED
				XKB

REVISIONS

www.helloxkb.com

UNSPECIFIED TOLERANCES	
ANGLAR	±5°
L≤4	±0.2
4<L≤16	±0.3
16<L≤63	±0.4
L>63	±0.5

DSND		DATE		SCALE: N/A	MODEL TYPE: X2006H-2*XX-N0HF
DWN		DATE		VIEW:	PART NO.:
CHKD		DATE		UNIT: mm/in	DWG NO.:
APPD		DATE		SIZE: A4	

XKB INDUSTRIAL PRECISION CO.,LIMITED

WEIGHT	SHEET	REVISION
	1/1	A0