THIS DRAWING IS UNPUBLISHED. RELEASED FOR PUBLICATION 20
© COPYRIGHT 20 BY - ALL RIGHTS RESERVED.

LOC	DIST
ES	00

REVISIONS

P	LTR	DESCRIPTION	DATE	DWN	APVD
	C3	ECR-15-002186	10FEB2015	F.W	SY.W
	D	ECR-16-002830	31MAR2016	R.T	SY.W
	D1	ECR-19-015679	11OCT2019	J.L	I.Y
	D2	ECN-21-115526	31AUG2021	J.L	J.Z

CODING 1

PIN OUT CONFIGURATION

		1A	1B	1C	1D	1E	1F	1G	1H	1J	1K	1L	1M	1N	1O	1P	1Q	2A	2B	2C	2D	2E	2F	2G	2H	2J	2K	2L	2M	2N	2O	2P	2Q	3A	3B	3C	3D	3E	3F	3G	3H	3J	3K	3L	3M	3N	3O	3P	3Q	4A	4B	4C	4D	4E	4F	4G	4H	4J	4K	4L	4M	4N	4O	4P	4Q
		1	2	3	4	5	6	7	8	9	10	11	12	13	14	15	16	17	18	19	20	21	22	23	24	25	26	27	28	29	30	31	32	33	34	35	36	37	38	39	40	41	42	43	44	45	46	47	48	49	50	51	52	53	54	55	56	57	58	59	60	61	62	63	64
D2 071	7-2050036-1	X		X	X											X	X		X	X			X	X	X		X		X	X	X		X	X	X		X	X	X		X		X	X	X	X	X		X	X	X	X	X					X		X		X		X	X
061	6-2050036-1	X		X	X		X	X								X	X		X	X			X	X	X		X		X		X			X	X		X	X	X		X					X	X			X	X	X	X			X		X		X		X		X	X
051	5-2050036-1	X	X			X	X	X		X		X	X		X	X	X	X	X	X	X	X	X	X	X	X			X	X	X	X	X		X	X	X	X			X	X	X	X		X		X	X							X		X	X				X	X
041	4-2050036-1	X				X	X	X							X	X	X	X	X		X	X		X	X	X			X	X	X	X	X		X	X	X	X				X		X		X			X							X		X	X				X	X
031	3-2050036-1	X	X	X	X	X	X	X	X				X		X	X		X	X			X	X	X	X			X	X		X	X	X	X	X	X	X	X	X	X	X	X	X	X		X		X	X	X	X	X	X	X					X	X	X	X
021	2-2050036-1	X				X	X	X								X	X	X			X	X		X	X	X			X		X	X	X			X	X	X				X		X		X			X					X			X		X	X				X	X
011	1-2050036-1	X				X	X	X							X	X	X	X	X		X	X		X	X	X	X		X	X	X	X			X	X	X	X			X	X	X	X		X		X	X			X				X	X	X	X		X	X	X	X
099	2050036-1	X	X	X	X	X	X	X	X	X	X	X	X	X	X	X	X	X	X	X	X	X	X	X	X	X	X	X	X	X	X	X	X	X	X	X	X	X	X	X	X	X	X	X	X	X	X	X	X	X	X	X	X	X	X	X	X	X	X	X	X	X	X	X	X
MARKING FOR PINOUT CONFIGURATION	TE PN	1	2	3	4	5	6	7	8	9	10	11	12	13	14	15	16	17	18	19	20	21	22	23	24	25	26	27	28	29	30	31	32	33	34	35	36	37	38	39	40	41	42	43	44	45	46	47	48	49	50	51	52	53	54	55	56	57	58	59	60	61	62	63	64

BLANKED CAVITIES INDICATE CLOSED LOCATIONS

WITH "X" MARKED CAVITIES INDICATE OPEN LOCATIONS

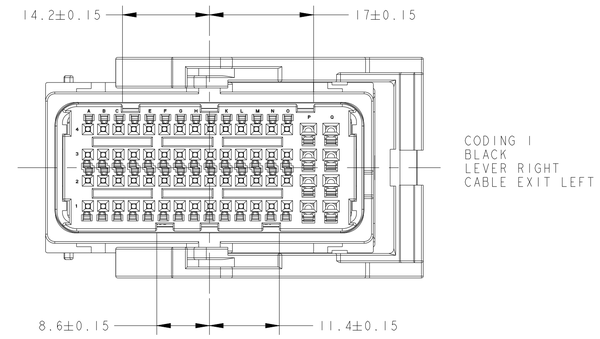

CODING 1

PIN OUT CONFIGURATION

		1A	1B	1C	1D	1E	1F	1G	1H	1J	1K	1L	1M	1N	1O	1P	1Q	2A	2B	2C	2D	2E	2F	2G	2H	2J	2K	2L	2M	2N	2O	2P	2Q	3A	3B	3C	3D	3E	3F	3G	3H	3J	3K	3L	3M	3N	3O	3P	3Q	4A	4B	4C	4D	4E	4F	4G	4H	4J	4K	4L	4M	4N	4O	4P	4Q
		1	2	3	4	5	6	7	8	9	10	11	12	13	14	15	16	17	18	19	20	21	22	23	24	25	26	27	28	29	30	31	32	33	34	35	36	37	38	39	40	41	42	43	44	45	46	47	48	49	50	51	52	53	54	55	56	57	58	59	60	61	62	63	64
044	4-2050036-4	X				X	X	X							X	X	X	X	X		X	X		X	X	X			X	X	X	X	X		X	X	X	X				X		X		X			X							X		X	X				X	X
034	3-2050036-4	X	X	X	X	X	X	X	X				X		X	X		X	X			X	X	X	X			X	X		X	X	X	X	X	X	X	X	X	X	X	X	X	X		X		X	X	X	X	X	X	X					X	X	X	X
024	2-2050036-4	X				X	X	X								X	X	X			X	X		X	X	X			X		X	X	X			X	X	X				X		X		X			X					X		X		X	X				X	X
014	1-2050036-4	X				X	X	X							X	X	X	X	X		X	X		X	X	X	X		X	X	X	X			X	X	X	X			X	X	X	X		X		X	X			X				X	X	X	X		X	X	X	X
099	2050036-4	X	X	X	X	X	X	X	X	X	X	X	X	X	X	X	X	X	X	X	X	X	X	X	X	X	X	X	X	X	X	X	X	X	X	X	X	X	X	X	X	X	X	X	X	X	X	X	X	X	X	X	X	X	X	X	X	X	X	X	X	X	X	X	X
MARKING FOR PINOUT CONFIGURATION	TE PN	1	2	3	4	5	6	7	8	9	10	11	12	13	14	15	16	17	18	19	20	21	22	23	24	25	26	27	28	29	30	31	32	33	34	35	36	37	38	39	40	41	42	43	44	45	46	47	48	49	50	51	52	53	54	55	56	57	58	59	60	61	62	63	64

BLANKED CAVITIES INDICATE CLOSED LOCATIONS

WITH "X" MARKED CAVITIES INDICATE OPEN LOCATIONS

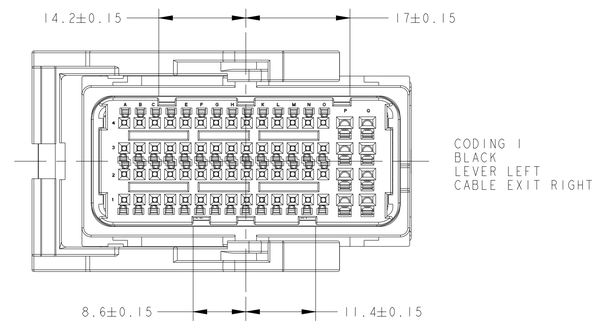

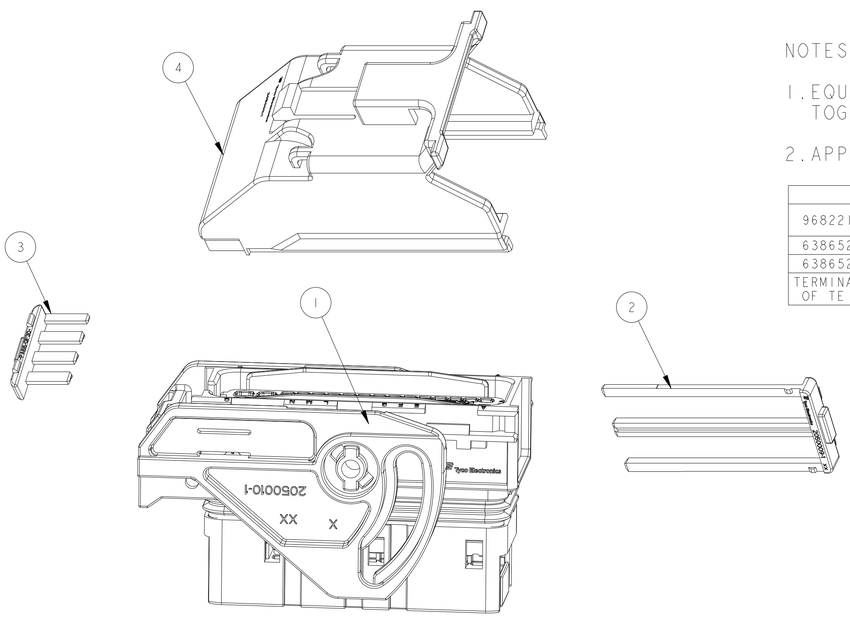

NOTES:

1. EQUAL QUANTITY OF x-2050036-x COMPONENTS TO BE PACKAGED TOGETHER IN SAME SHIPPING BOX.

2. APPLICABLE TERMINALS

TERMINALS				
968221-1	PRE-TIN	0.5-0.75	Ø1.40-1.90	BLIND PLUG PN 1394871-1
638652-2	PRE-TIN	0.75-1.0	Ø1.70-2.10	BLIND PLUG PN 1670108-1
638652-1	PRE-TIN	1.0-1.5	Ø1.90-2.40	
TERMINALS OF TE PN	FINISH	WIRE SIZE (mm2)	WIRE SIZE DIAMETER mm	NOTES

X-2050036-6	X-2050036-5	X-2050036-4	X-2050036-3	X-2050036-2	X-2050036-1	COMPONENT PART NO.	DESCRIPTION	ITEM NO.
1	1	1	1	1	1	2050011-2	COVER FOR 64POS. REC. HOUSING	4
1	1	1	1	1	1	2050013-2	SHORT RETAINER FOR 64POS.REC. HOUSING	3
1	1	1	1	1	1	2050009-2	RETAINER FOR 64POS. REC. HOUSING	2
1						X-2050004-6	64POS.MIXED REC. HOUSING	1
	1					X-2050004-5	64POS.MIXED REC. HOUSING	1
		1				X-2050004-4	64POS.MIXED REC. HOUSING	1
			1			X-2050004-3	64POS.MIXED REC. HOUSING	1
				1		X-2050004-2	64POS.MIXED REC. HOUSING	1
					1	X-2050004-1	64POS.MIXED REC. HOUSING	1

PACKING PART NO.& Q'TY

THIS DRAWING IS A CONTROLLED DOCUMENT.

DIMENSIONS: mm

TOLERANCES UNLESS OTHERWISE SPECIFIED:
~~0 PLC ±~~
~~1 PLC ±0.5~~
~~2 PLC ±0.13~~
~~3 PLC ±0.013~~
~~4 PLC ±0.0001~~
ANGLES ±

MATERIAL - -
FINISH - -

DWN	SEAN.WANG	09APR2008
CHK	A.GUANCO	09APR2008
APVD	K.ODA	09APR2008
PRODUCT SPEC	-	
APPLICATION SPEC	-	
WEIGHT	47.5g	

TE Connectivity

NAME: PACKAGE COMPONENTS LIST 64POS.MIXED REC.HOUSING -

SIZE	CAGE CODE	DRAWING NO	RESTRICTED TO
A1	00779	C-2050036	-

CUSTOMER DRAWING | SCALE 2:1 | SHEET 1 OF 3 | REV D2

4805 (3/11)

THIS DRAWING IS UNPUBLISHED. RELEASED FOR PUBLICATION 20
© COPYRIGHT 20 BY - ALL RIGHTS RESERVED.

LOC	DIST
ES	00

REVISIONS

P	LTR	DESCRIPTION	DATE	DWN	APVD
	-	SEE SHEET 1	-	-	-

CODING 2

PIN OUT CONFIGURATION

		1A	1B	1C	1D	1E	1F	1G	1H	1J	1K	1L	1M	1N	1O	1P	1Q	2A	2B	2C	2D	2E	2F	2G	2H	2J	2K	2L	2M	2N	2O	2P	2Q	3A	3B	3C	3D	3E	3F	3G	3H	3J	3K	3L	3M	3N	3O	3P	3Q	4A	4B	4C	4D	4E	4F	4G	4H	4J	4K	4L	4M	4N	4O	4P	4Q
		1	2	3	4	5	6	7	8	9	10	11	12	13	14	15	16	17	18	19	20	21	22	23	24	25	26	27	28	29	30	31	32	33	34	35	36	37	38	39	40	41	42	43	44	45	46	47	48	49	50	51	52	53	54	55	56	57	58	59	60	61	62	63	64
099	2050036-2	X	X	X	X	X	X	X	X	X	X	X	X	X	X	X	X	X	X	X	X	X	X	X	X	X	X	X	X	X	X	X	X	X	X	X	X	X	X	X	X	X	X	X	X	X	X	X	X	X	X	X	X	X	X	X	X	X	X	X	X	X	X	X	X	X	X	X	X
MARKING FOR PINOUT CONFIGURATION	TE PN	1	2	3	4	5	6	7	8	9	10	11	12	13	14	15	16	17	18	19	20	21	22	23	24	25	26	27	28	29	30	31	32	33	34	35	36	37	38	39	40	41	42	43	44	45	46	47	48	49	50	51	52	53	54	55	56	57	58	59	60	61	62	63	64

BLANKED CAVITIES INDICATE CLOSED LOCATIONS

WITH "X" MARKED CAVITIES INDICATE OPEN LOCATIONS

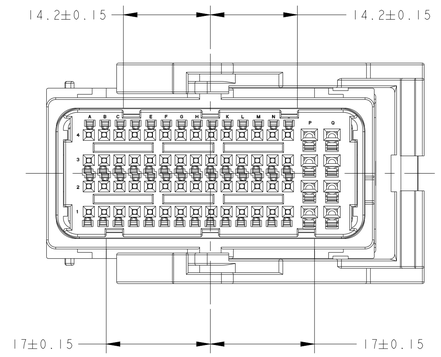

CODING 2
GREY
LEVER RIGHT
CABLE EXIT LEFT

CODING 2

PIN OUT CONFIGURATION

		1A	1B	1C	1D	1E	1F	1G	1H	1J	1K	1L	1M	1N	1O	1P	1Q	2A	2B	2C	2D	2E	2F	2G	2H	2J	2K	2L	2M	2N	2O	2P	2Q	3A	3B	3C	3D	3E	3F	3G	3H	3J	3K	3L	3M	3N	3O	3P	3Q	4A	4B	4C	4D	4E	4F	4G	4H	4J	4K	4L	4M	4N	4O	4P	4Q
		1	2	3	4	5	6	7	8	9	10	11	12	13	14	15	16	17	18	19	20	21	22	23	24	25	26	27	28	29	30	31	32	33	34	35	36	37	38	39	40	41	42	43	44	45	46	47	48	49	50	51	52	53	54	55	56	57	58	59	60	61	62	63	64
099	2050036-5	X	X	X	X	X	X	X	X	X	X	X	X	X	X	X	X	X	X	X	X	X	X	X	X	X	X	X	X	X	X	X	X	X	X	X	X	X	X	X	X	X	X	X	X	X	X	X	X	X	X	X	X	X	X	X	X	X	X	X	X	X	X	X	X	X	X	X	X
MARKING FOR PINOUT CONFIGURATION	TE PN	1	2	3	4	5	6	7	8	9	10	11	12	13	14	15	16	17	18	19	20	21	22	23	24	25	26	27	28	29	30	31	32	33	34	35	36	37	38	39	40	41	42	43	44	45	46	47	48	49	50	51	52	53	54	55	56	57	58	59	60	61	62	63	64

BLANKED CAVITIES INDICATE CLOSED LOCATIONS

WITH "X" MARKED CAVITIES INDICATE OPEN LOCATIONS

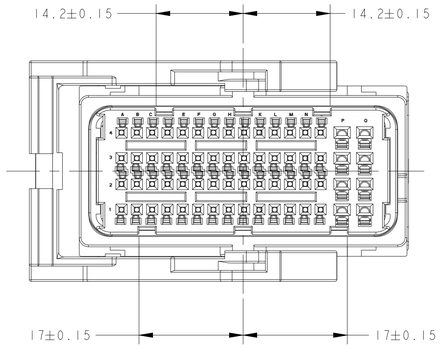

CODING 2
GREY
LEVER LEFT
CABLE EXIT RIGHT

THIS DRAWING IS A CONTROLLED DOCUMENT.

DIMENSIONS: mm

TOLERANCES UNLESS OTHERWISE SPECIFIED:
~~0 PLC ±~~
~~1 PLC ±0.5~~
~~2 PLC ±0.13~~
~~3 PLC ±0.013~~
~~4 PLC ±0.0001~~
ANGLES ±

MATERIAL - -
FINISH - -

DWN	SEAN.WANG	09APR2008
CHK	A.GUANCO	09APR2008
APVD	K.ODA	09APR2008
PRODUCT SPEC	-	
APPLICATION SPEC	-	
WEIGHT	47.5g	

TE Connectivity

NAME: PACKAGE COMPONENTS LIST 64POS.MIXED REC.HOUSING -

SIZE	CAGE CODE	DRAWING NO	RESTRICTED TO
A1	00779	C-2050036	-

CUSTOMER DRAWING | SCALE 1:1 | SHEET 2 OF 3 | REV D2

4805 (3/11)

THIS DRAWING IS UNPUBLISHED. RELEASED FOR PUBLICATION 20
© COPYRIGHT 20 BY - ALL RIGHTS RESERVED.

LOC	DIST
ES	00

REVISIONS

P	LTR	DESCRIPTION	DATE	DWN	APVD
	-	SEE SHEET 1	-	-	-

CODING 3

PIN OUT CONFIGURATION

| | | |