Enhanced Touch I/O Flash MCU

BS83B08C/BS83B12C/BS83B16C

Revision: V1.40 Date: August 31, 2021

www.holtek.com

Table of Contents

Features 6
CPU Features 6
Peripheral Features 6
General Description 7
Selection Table 7
Block Diagram 8
Pin Assignment 8
Pin Description 10
Absolute Maximum Ratings 13
D.C. Characteristics 14
Operating Voltage Characteristics 14
Standby Current Characteristics 14
Operating Current Characteristics 15
A.C. Characteristics 15
High Speed Internal Oscillator – HIRC – Frequency Accuracy 15
Low Speed Internal Oscillator Characteristics – LIRC 16
Operating Frequency Characteristic Curves 16
System Start Up Time Characteristics 16
Input/Output Characteristics 17
Memory Characteristics 17
LVR Electrical Characteristics 17
Power-on Reset Characteristics 18
System Architecture 18
Clocking and Pipelining 18
Program Counter 19
Stack 20
Arithmetic and Logic Unit – ALU 20
Flash Program Memory 21
Structure 21
Special Vectors 21
Look-up Table 21
Table Program Example 22
In Circuit Programming – ICP 23
On-Chip Debug Support – OCDS 24
Data Memory 24
Structure 24
General Purpose Data Memory 25
Special Purpose Data Memory 25

Special Function Register Description 29
Indirect Addressing Register – IAR0, IAR1 29
Memory Pointers – MP0, MP1 29
Bank Pointer – BP 30
Accumulator – ACC 30
Program Counter Low Register – PCL 31
Look-up Table Registers – TBLP, TBHP, TBLH 31
Status Register – STATUS 31

EEPROM Data Memory 33
EEPROM Data Memory Structure 33
EEPROM Registers 33
Reading Data from the EEPROM 35
Writing Data to the EEPROM 35
Write Protection 35
EEPROM Interrupt 35
Programming Considerations 36

Oscillators 37
Oscillator Overview 37
System Clock Configurations 37
Internal RC Oscillator – HIRC 38
Internal 32kHz Oscillator – LIRC 38

Operating Modes and System Clocks 38
System Clocks 38
System Operation Modes 39
Control Registers 40
Operating Mode Switching 42
Standby Current Considerations 45
Wake-up 45
Programming Considerations 45

Watchdog Timer 46
Watchdog Timer Clock Source 46
Watchdog Timer Control Register 46
Watchdog Timer Operation 47

Reset and Initialisation 48
Reset Functions 48
Reset Initial Conditions 50

Input/Output Ports 53
Pull-high Resistors 54
Port A Wake-up 54
I/O Port Control Registers 55
Pin-remapping Function 55
I/O Pin Structures 56
Programming Considerations 56

Timer Modules – TM 57
Introduction 57
TM Operation 57
TM Clock Source 57
TM Interrupts 57
TM External Pins 58
TM Input/Output Pin Selection 58
Programming Considerations 59
Periodic Type TM – PTM 60
Periodic TM Operation 60
Periodic Type TM Register Description 60
Periodic Type TM Operating Modes 64
Touch Key Function 73
Touch Key Structure 73
Touch Key Register Definition 73
Touch Key Operation 80
Touch Key Interrupt 81
Programming Considerations 81
Serial Interface Module – SIM 81
SPI Interface 81
I²C Interface ..... 水 88
Interrupts 97
Interrupt Registers 97
Interrupt Operation 100
External Interrupt 101
Touch Key Interrupt 101
Time Base Interrupt 101
Multi-function Interrupt 102
Serial Interface Module Interrupt 103
EEPROM Interrupt 103
TM Interrupt 103
Interrupt Wake-up Function 103
Programming Considerations 104
Application Circuits 104
Instruction Set 105
Introduction 105
Instruction Timing 105
Moving and Transferring Data 105
Arithmetic Operations 105
Logical and Rotate Operation 106
Branches and Control Transfer 106
Bit Operations 106
Table Read Operations 106
Other Operations 106

Instruction Set Summary 107
Table Conventions..... 107
Instruction Definition..... 109
Package Information 118
16-pin NSOP (150mil) Outline Dimensions..... 119
20-pin SOP (300mil) Outline Dimensions 120
24-pin SOP(300mil) Outline Dimensions 121
16-pin SSOP (150mil) Outline Dimensions 122
20-pin SSOP (150mil) Outline Dimensions 123
24-pin SSOP (150mil) Outline Dimensions 124
SAW Type 16-pin QFN (4mm×4mm×0.75mm) Outline Dimensions 125
SAW Type 20-pin QFN (4mm×4mm×0.75mm) Outline Dimensions 126
SAW Type 24-pin QFN (4mm×4mm, lead 0.325mm) Outline Dimensions 127

Features

CPU Features

- Operating voltage
  - f_{SYS}=8MHz: 2.2V~5.5V
  - f_{SYS}=12MHz: 2.7V~5.5V
  - f_{SYS}=16MHz: 3.3V~5.5V
- Up to 0.25μs instruction cycle with 16MHz system clock at V_{DD}=5V
- Power down and wake-up functions to reduce power consumption
- Oscillator types
  - Internal High Speed RC – HIRC
  - Internal Low Speed 32kHz RC – LIRC
- Multi-mode operation: FAST, SLOW, IDLE and SLEEP
- Fully integrated internal oscillator requires no external components
- All instructions executed in one or two instruction cycles
- Table read instructions
- 61 powerful instructions
- 6-level subroutine nesting
- Bit manipulation instruction

Peripheral Features

- Flash Program Memory: 2K×16
- Data Memory: 288×8~512×8
- True EEPROM Memory: 64×8
- Watchdog Timer function
- Up to 22 bidirectional I/O lines
- Single external interrupt line shared with I/O pin
- Single 10-bit PTM for time measurement, capture input, compare match output or PWM output or single pulse output function
- Single Time-Base function for generation of fixed time interrupt signals
- Serial Interface Module includes SPI and I^2C interfaces
- Low voltage reset function
- 8/12/16 Touch Key functions
- Package types: 16-pin NSOP/SSOP/QFN, 20/24-pin SOP/SSOP/QFN

General Description

This series of devices are a Flash Memory type 8-bit high performance RISC architecture microcontroller with fully integrated Touch Key functions. With the Touch Key function provided internally and including a fully functional microcontroller as well as the convenience of Flash Memory multi-programming features, these devices have all the features to offer designers a reliable and easy means of implementing Touch Keys within their product applications.

The Touch Key function is completely integrated eliminating the need for external components. In addition to the flash program memory, other memory includes an area of RAM Data Memory as well as an area of true EEPROM memory for storage of non-volatile data such as serial numbers, calibration data etc. Protective features such as an internal Watchdog Timer and Low Voltage Reset functions coupled with excellent noise immunity and ESD protection ensure that reliable operation is maintained in hostile electrical environments.

All devices include fully integrated low and high speed oscillators which require no external components for their implementation. The ability to operate and switch dynamically between a range of operating modes using different clock sources gives users the ability to optimise microcontroller operation and minimise power consumption. Easy communication with the outside world is provided using the internal I^2C and SPI interfaces, while the inclusion of flexible I/O programming features, Timer Module and many other features further enhance devices functionality and flexibility.

These touch key devices will find excellent use in a huge range of modern Touch Key product applications such as instrumentation, household appliances, electronically controlled tools to name but a few.

Selection Table

Most features are common to all devices. The main features distinguishing them are DataMemory capacity I/O count and Touch Keys. The following table summarises the main features of each device.

Part No.	V_{DD}	Program Memory	Data Memory	EEPROM	I/O	External Interrupt
BS83B08C	2.2V~5.5V	2K×16	288×8	64×8	14	1
BS83B12C	2.2V~5.5V	2K×16	512×8	64×8	18	1
BS83B16C	2.2V~5.5V	2K×16	512×8	64×8	22	1

Part No.	Timer Module	Time Base	Touch Key	SIM (SPI/I^2C)	Stacks	Package
BS83B08C	10-bit PTM×1	1	8	1	6	16NSOP/SSOP/QFN
BS83B12C	10-bit PTM×1	1	12	1	6	20SOP/SSOP/QFN
BS83B16C	10-bit PTM×1	1	16	1	6	24SOP/SSOP/QFN

Block Diagram

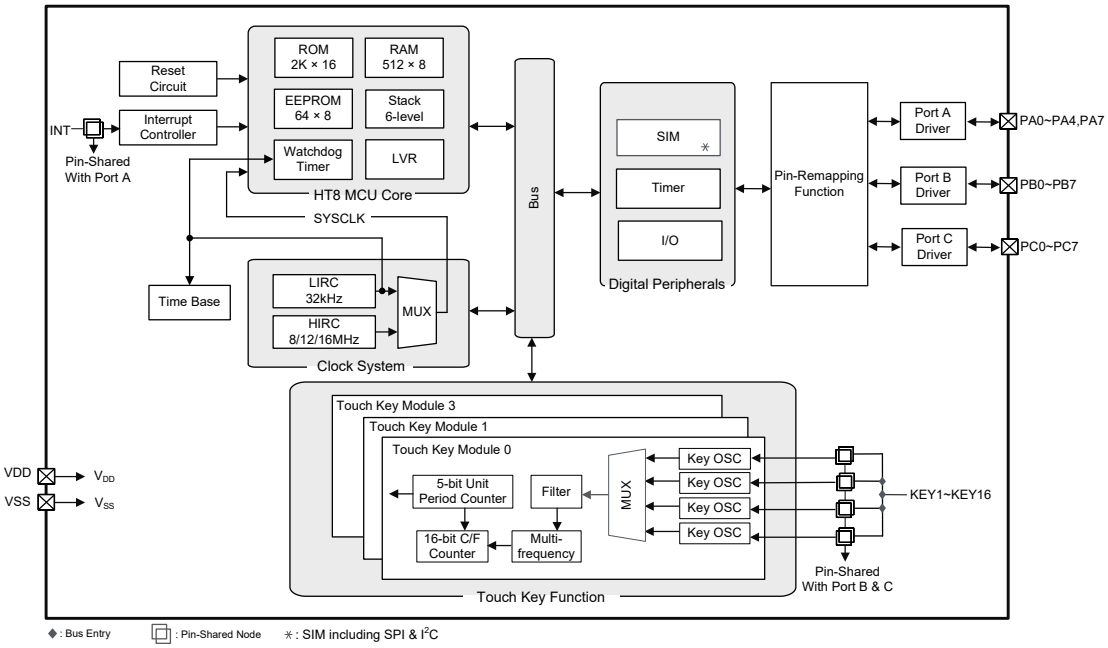

Pin Assignment

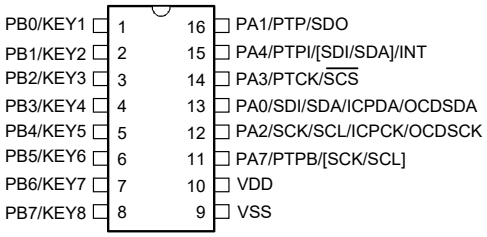

BS83B08C/BS83BV08C
16 NSOP-A/SSOP-A

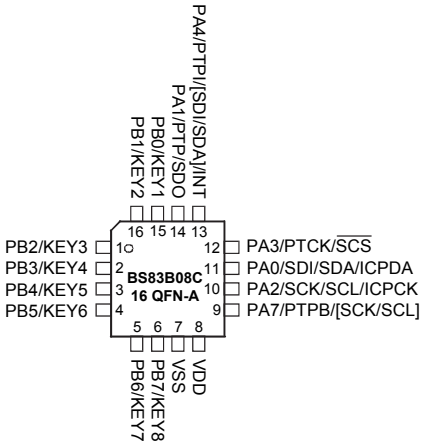

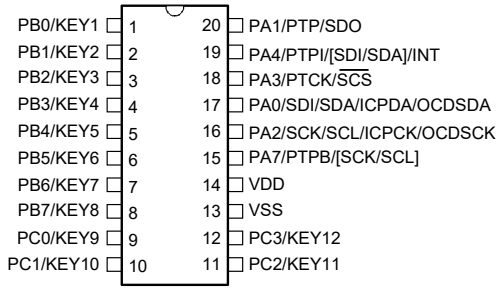

BS83B12C/BS83BV12C
20 SOP-A/SSOP-A

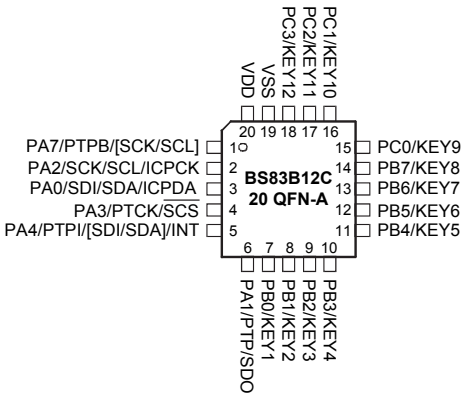

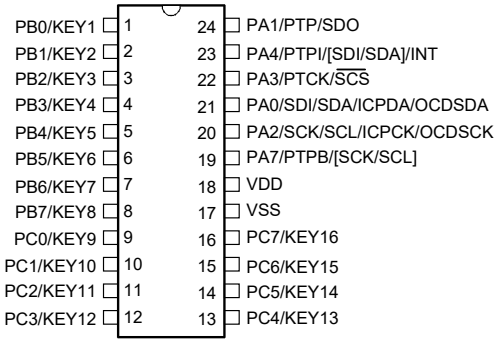

BS83B16C/BS83BV16C
24 SOP-A/SSOP-A

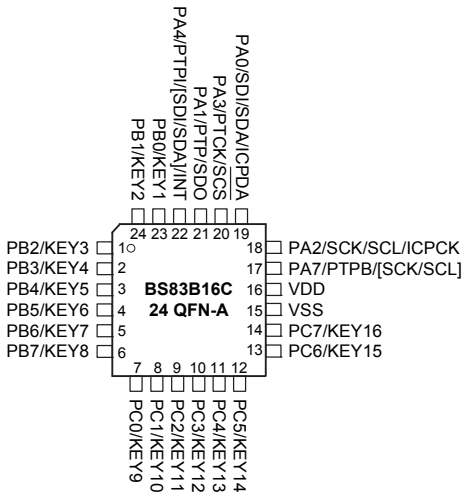

Note: 1. Bracketed pin names indicate non-default pinout remapping locations. The detailed information can be referenced to the relevant chapter.

2. If the pin-shared pin functions have multiple outputs simultaneously, its pin names at the right side of the "/" sign can be used for higher priority.

3. The OCDSDA and OCDSCK pins are supplied for the OCDS dedicated pins and as such only available for the BS83BV08C/BS83BV12C/BS83BV16C devices which are the OCDS EV chips for the BS83B08C/BS83B12C/BS83B16C devices respectively.

Pin Description

With the exception of the power pins and some relevant transformer control pins, all pins on the device can be referenced by their Port name, e.g. PA0, PA1 etc., which refer to the digital I/O function of the pins. However these Port pins are also shared with other function such as the Touch Key function, Timer Module pins etc. The function of each pin is listed in the following tables, however the details behind how each pin is configured is contained in other sections of the datasheet.

BS83B08C

Pin Name	Function	OPT	I/T	O/T	Description
PA0/SDI/SDA/ICPDA/ OCDSDA	PA0	PAWU PAPU	ST	CMOS	General purpose I/O. Register enabled pull-up and wake-up
	SDI	SIMC0 PXRM	ST	—	SPI serial data input
	SDA	SIMC0 PXRM	ST	NMOS	I^2C data line
	ICPDA	—	ST	CMOS	In-circuit programming address/data pin
	OCDSDA	—	ST	CMOS	OCDS data/address pin, for EV chip only
PA1/PTP/SDO	PA1	PAWU PAPU	ST	CMOS	General purpose I/O. Register enabled pull-up and wake-up
	PTP	PTMC0 PTMC1 PXRM	—	CMOS	PTM output
	SDO	SIMC0	—	CMOS	SPI serial data output
PA2/SCK/SCL/ICPCK/ OCDSCK	PA2	PAWU PAPU	ST	CMOS	General purpose I/O. Register enabled pull-up and wake-up
	SCK	SIMC0 PXRM	ST	CMOS	SPI serial clock
	SCL	SIMC0 PXRM	ST	NMOS	I^2C clock line
	ICPCK	—	ST	—	In-circuit programming clock pin
	OCDSCK	—	ST	—	OCDS clock pin, for EV chip only
PA3/PTCK/$\overline{SCS}$	PA3	PAWU PAPU	ST	CMOS	General purpose I/O. Register enabled pull-up and wake-up
	PTCK	PTMC0	ST	—	PTM clock input
	$\overline{SCS}$	SIMC0	ST	CMOS	SPI slave select pin
PA4/PTPI/[SDI/SDA]/INT	PA4	PAWU PAPU	ST	CMOS	General purpose I/O. Register enabled pull-up and wake-up
	PTPI	PTMC0 PTMC1	ST	—	PTM capture input
	SDI	SIMC0 PXRM	ST	—	SPI serial data input
	SDA	SIMC0 PXRM	ST	NMOS	I^2C data line
	INT	INTC0 INTEG	ST	—	External interrupt input
PA7/PTPB/[SCK/SCL]	PA7	PAWU PAPU	ST	CMOS	General purpose I/O. Register enabled pull-up and wake-up
	PTPB	PXRM	—	CMOS	PTM inverted output
	SCK	SIMC0 PXRM	ST	CMOS	SPI serial clock
	SCL	SIMC0 PXRM	ST	NMOS	I^2C clock line

Pin Name	Function	OPT	I/T	O/T	Description
PB0/KEY1~PB3/KEY4	PB0~PB3	PBPU	ST	CMOS	General purpose I/O. Register enabled pull-up
	KEY1~KEY4	TKM0C1	NSI	—	Touch Key inputs
PB4/KEY5~PB7/KEY8	PB4~PB7	PBPU	ST	CMOS	General purpose I/O. Register enabled pull-up
	KEY5~KEY8	TKM1C1	NSI	—	Touch Key inputs
VDD	VDD	—	PWR	—	Positive power supply
VSS	VSS	—	PWR	—	Negative power supply, ground

Legend: I/T: Input type;
OPT: Optional by register option;
ST: Schmitt Trigger input;
NMOS: NMOS output;
NSI: Non Standard input.
O/T: Output type;
PWR: Power;
CMOS: CMOS output;
AN: Analog signal;

BS83B12C

Pin Name	Function	OPT	I/T	O/T	Description
PA0/SDI/SDA/ICPDA/ OCDSDA	PA0	PAWU PAPU	ST	CMOS	General purpose I/O. Register enabled pull-up and wake-up
	SDI	SIMC0 PXRM	ST	—	SPI serial data input
	SDA	SIMC0 PXRM	ST	NMOS	I²C data line
	ICPDA	—	ST	CMOS	In-circuit programming address/data pin
	OCDSDA	—	ST	CMOS	OCDS data/address pin, for EV chip only
PA1/PTP/SDO	PA1	PAWU PAPU	ST	CMOS	General purpose I/O. Register enabled pull-up and wake-up
	PTP	PTMC0 PTMC1 PXRM	—	CMOS	PTM output
	SDO	SIMC0	—	CMOS	SPI serial data output
PA2/SCK/SCL/ICPCK/ OCDSCK	PA2	PAWU PAPU	ST	CMOS	General purpose I/O. Register enabled pull-up and wake-up
	SCK	SIMC0 PXRM	ST	CMOS	SPI serial clock
	SCL	SIMC0 PXRM	ST	NMOS	I²C clock line
	ICPCK	—	ST	—	In-circuit programming clock pin
	OCDSCK	—	ST	—	OCDS clock pin, for EV chip only
PA3/PTCK/$\overline{\text{SCS}}$	PA3	PAWU PAPU	ST	CMOS	General purpose I/O. Register enabled pull-up and wake-up
	PTCK	PTMC0	ST	—	PTM clock input
	$\overline{\text{SCS}}$	SIMC0	ST	CMOS	SPI slave select pin
PA4/PTPI/[SDI/SDA]/ INT	PA4	PAWU PAPU	ST	CMOS	General purpose I/O. Register enabled pull-up and wake-up
	PTPI	PTMC0 PTMC1	ST	—	PTM capture input
	SDI	SIMC0 PXRM	ST	—	SPI serial data input
	SDA	SIMC0 PXRM	ST	NMOS	I²C data line
	INT	INTC0 INTEG	ST	—	External interrupt input

Pin Name	Function	OPT	I/T	O/T	Description
PA7/PTPB/[SCK/SCL]	PA7	PAWU PAPU	ST	CMOS	General purpose I/O. Register enabled pull-up and wake-up
	PTPB	PXRM	—	CMOS	PTM inverted output
	SCK	SIMC0 PXRM	ST	CMOS	SPI serial clock
	SCL	SIMC0 PXRM	ST	NMOS	I^2C clock line
PB0/KEY1~PB3/KEY4	PB0~PB3	PBPU	ST	CMOS	General purpose I/O. Register enabled pull-up
	KEY1~KEY4	TKM0C1	NSI	—	Touch Key inputs
PB4/KEY5~PB7/KEY8	PB4~PB7	PBPU	ST	CMOS	General purpose I/O. Register enabled pull-up
	KEY5~KEY8	TKM1C1	NSI	—	Touch Key inputs
PC0/KEY9~PC3/KEY12	PC0~PC3	PCPU	ST	CMOS	General purpose I/O. Register enabled pull-up
	KEY9~KEY12	TKM2C1	NSI	—	Touch Key inputs
VDD	VDD	—	PWR	—	Positive power supply
VSS	VSS	—	PWR	—	Negative power supply, ground

Legend: I/T: Input type;
OPT: Optional by register option;
ST: Schmitt Trigger input;
NMOS: NMOS output;
NSI: Non Standard input.
O/T: Output type;
PWR: Power;
CMOS: CMOS output;
AN: Analog signal;

BS83B16C

Pin Name	Function	OPT	I/T	O/T	Description
PA0/SDI/SDA/ICPDA/ OCDSDA	PA0	PAWU PAPU	ST	CMOS	General purpose I/O. Register enabled pull-up and wake-up
	SDI	SIMC0 PXRM	ST	—	SPI serial data input
	SDA	SIMC0 PXRM	ST	NMOS	I^2C data line
	ICPDA	—	ST	CMOS	In-circuit programming address/data pin
	OCDSDA	—	ST	CMOS	OCDS data/address pin, for EV chip only
PA1/PTP/SDO	PA1	PAWU PAPU	ST	CMOS	General purpose I/O. Register enabled pull-up and wake-up
	PTP	PTMC0 PTMC1 PXRM	—	CMOS	PTM output
	SDO	SIMC0	—	CMOS	SPI serial data output
PA2/SCK/SCL/ICPCK/ OCDSCK	PA2	PAWU PAPU	ST	CMOS	General purpose I/O. Register enabled pull-up and wake-up
	SCK	SIMC0 PXRM	ST	CMOS	SPI serial clock
	SCL	SIMC0 PXRM	ST	NMOS	I^2C clock line
	ICPCK	—	ST	—	In-circuit programming clock pin
	OCDSCK	—	ST	—	OCDS clock pin, for EV chip only
PA3/PTCK/$\overline{SCS}$	PA3	PAWU PAPU	ST	CMOS	General purpose I/O. Register enabled pull-up and wake-up
	PTCK	PTMC0	ST	—	PTM clock input
	$\overline{SCS}$	SIMC0	ST	CMOS	SPI slave select pin

Pin Name	Function	OPT	I/T	O/T	Description
PA4/PTPI/[SDI/SDA]/INT	PA4	PAWU PAPU	ST	CMOS	General purpose I/O. Register enabled pull-up and wake-up
	PTPI	PTMC0 PTMC1	ST	—	PTM capture input
	SDI	SIMC0 PXRM	ST	—	SPI serial data input
	SDA	SIMC0 PXRM	ST	NMOS	I²C data line
	INT	INTC0 INTEG	ST	—	External interrupt input
PA7/PTPB/[SCK/SCL]	PA7	PAWU PAPU	ST	CMOS	General purpose I/O. Register enabled pull-up and wake-up
	PTPB	PXRM	—	CMOS	PTM inverted output
	SCK	SIMC0 PXRM	ST	CMOS	SPI serial clock
	SCL	SIMC0 PXRM	ST	NMOS	I²C clock line
PB0/KEY1~PB3/KEY4	PB0~PB3	PBPU	ST	CMOS	General purpose I/O. Register enabled pull-up
	KEY1~KEY4	TKM0C1	NSI	—	Touch Key inputs
PB4/KEY5~PB7/KEY8	PB4~PB7	PBPU	ST	CMOS	General purpose I/O. Register enabled pull-up
	KEY5~KEY8	TKM1C1	NSI	—	Touch Key inputs
PC0/KEY9~PC3/KEY12	PC0~PC3	PCPU	ST	CMOS	General purpose I/O. Register enabled pull-up
	KEY9~KEY12	TKM2C1	NSI	—	Touch Key inputs
PC4/KEY13~PC7/KEY16	PC4~PC7	PCPU	ST	CMOS	General purpose I/O. Register enabled pull-up
	KEY13~KEY16	TKM3C1	NSI	—	Touch Key inputs
VDD	VDD	—	PWR	—	Positive power supply
VSS	VSS	—	PWR	—	Negative power supply, ground

Legend: I/T: Input type;
OPT: Optional by register option;
ST: Schmitt Trigger input;
NMOS: NMOS output;
NSI: Non Standard input.
O/T: Output type;
PWR: Power;
CMOS: CMOS output;
AN: Analog signal;

Absolute Maximum Ratings

Supply Voltage ..... V_{SS}−0.3V to V_{SS}+6.0V
Input Voltage ..... V_{SS}−0.3V to V_{DD}+0.3V
Storage Temperature ..... -50˚C to 125˚C
Operating Temperature ..... -40˚C to 85˚C
I_{OH} Total ..... -80mA
I_{OL} Total 80mA
Total Power Dissipation 500mW

Note: These are stress ratings only. Stresses exceeding the range specified under "Absolute Maximum Ratings" may cause substantial damage to the device. Functional operation of the devices at other conditions beyond those listed in the specification is not implied and prolonged exposure to extreme conditions may affect device reliability.

D.C. Characteristics

For data in the following tables, note that factors such as oscillator type, operating voltage, operating frequency, pin load conditions, temperature and program instruction type, etc., can all exert an influence on the measured values.

Operating Voltage Characteristics

Ta=-40˚C~85˚C

Symbol	Parameter	Test Conditions	Min.	Typ.	Max.	Unit
V_{DD}	Operating Voltage – HIRC	f_{SYS}=8MHz	2.2	—	5.5	V
		f_{SYS}=12MHz	2.7	—	5.5	
		f_{SYS}=16MHz	3.3	—	5.5	
	Operating Voltage – LIRC	f_{SYS}=32kHz	2.2	—	5.5	

Standby Current Characteristics

Ta=25˚C

Symbol	Standby Mode	Test Conditions		Min.	Typ.	Max.	Max. @ 85˚C	Unit
		V_{DD}	Conditions					
I_{STB}	SLEEP Mode	2.2V	WDT on	—	1.2	2.4	2.9	μA
		3V		—	1.5	3	3.6	
		5V		—	3	5	6	
	IDLE0 Mode – LIRC	2.2V	f_{SUB} on	—	2.4	4	4.8	μA
		3V		—	3	5	6	
		5V		—	5	10	12	
	IDLE1 Mode – HIRC	2.2V	f_{SUB} on, f_{SYS}=8MHz	—	288	400	480	μA
		3V		—	360	500	600	
		5V		—	600	800	960	
		2.7V	f_{SUB} on, f_{SYS}=12MHz	—	432	600	720	
		3V		—	540	750	900	
		5V		—	800	1200	1440	
		3.3V	f_{SUB} on, f_{SYS}=16MHz	—	1.1	1.6	1.9	mA
		5V		—	1.4	2.0	2.4	

Note: When using the characteristic table data, the following notes should be taken into consideration:

1. Any digital inputs are setup in a non-floating condition.
2. All measurements are taken under conditions of no load and with all peripherals in an off state.
3. There are no DC current paths.
4. All Standby Current values are taken after a HALT instruction execution thus stopping all instruction execution.

Operating Current Characteristics

Ta=25˚C

Symbol	Operating Mode	Test Conditions		Min.	Typ.	Max.	Unit
		V_{DD}	Conditions				
I_{DD}	SLOW Mode – LIRC	2.2V	f_{SYS}=32kHz	—	8	16	μA
		3V		—	10	20	
		5V		—	30	50	
	FAST Mode – HIRC	2.2V	f_{SYS}=8MHz	—	0.6	1.0	mA
		3V		—	0.8	1.2	
		5V		—	1.6	2.4	
		2.7V	f_{SYS}=12MHz	—	1.0	1.4	
		3V		—	1.2	1.8	
		5V		—	2.4	3.6	
		3.3V	f_{SYS}=16MHz	—	3.0	4.5	
		5V		—	4.0	6.0	

Note: When using the characteristic table data, the following notes should be taken into consideration:

1. Any digital inputs are setup in a non-floating condition.
2. All measurements are taken under conditions of no load and with all peripherals in an off state.
3. There are no DC current paths.
4. All Operating Current values are measured using a continuous NOP instruction program loop.

A.C. Characteristics

For data in the following tables, note that factors such as oscillator type, operating voltage, operating frequency and temperature etc., can all exert an influence on the measured values.

High Speed Internal Oscillator – HIRC – Frequency Accuracy

During the program writing operation the writer will trim the HIRC oscillator at a user selected HIRC frequency and user selected voltage of 3V or 5V.

Symbol	Parameter	Test Conditions		Min.	Typ.	Max.	Unit
		V_{DD}	Temp.				
f_{HIRC}	8MHz Writer Trimmed HIRC Frequency	3V/5V	25°C	-1%	8	+1%	MHz
			-40°C ~ 85°C	-2%	8	+2%	
		2.2V~5.5V	25°C	-2.5%	8	+2.5%	
			-40°C ~ 85°C	-3%	8	+3%	
	12MHz Writer Trimmed HIRC Frequency	3V/5V	25°C	-1%	12	+1%	MHz
			-40°C ~ 85°C	-2%	12	+2%	
		2.7V~5.5V	25°C	-2.5%	12	+2.5%	
			-40°C ~ 85°C	-3%	12	+3%	
	16MHz Writer Trimmed HIRC Frequency	5V	25°C	-1%	16	+1%	MHz
			-40°C ~ 85°C	-2%	16	+2%	
		3.3V~5.5V	25°C	-2.5%	16	+2.5%	
			-40°C ~ 85°C	-3%	16	+3%	

Note: 1. The 3V/5V values for V_{DD} are provided as these are the two selectable fixed voltages at which the HIRC frequency is trimmed by the writer.

2. The row below the 3V/5V trim voltage row is provided to show the values for the full V_{DD} range operating voltage. It is recommended that the trim voltage is fixed at 3V for application voltage ranges from 2.2V to 3.6V and fixed at 5V for application voltage ranges from 3.3V to 5.5V.

3. The minimum and maximum tolerance values provided in the table are only for the frequency at which the writer trims the HIRC oscillator. After trimming at this chosen specific frequency any change in HIRC oscillator frequency using the oscillator register control bits by the application program will give a frequency tolerance to within ±20%.

Low Speed Internal Oscillator Characteristics – LIRC

Ta=25˚C, unless otherwise specified

Symbol	Parameter	Test Conditions		Min.	Typ.	Max.	Unit
		V_{DD}	Temp.				
f_{LIRC}	LIRC Frequency	2.2V~5.5V	25˚C	-10%	32	+10%	kHz
			-40˚C~85˚C	-50%	32	+60%	
t_{START}	LIRC Start Up Time	—	—	—	—	500	μs

Operating Frequency Characteristic Curves

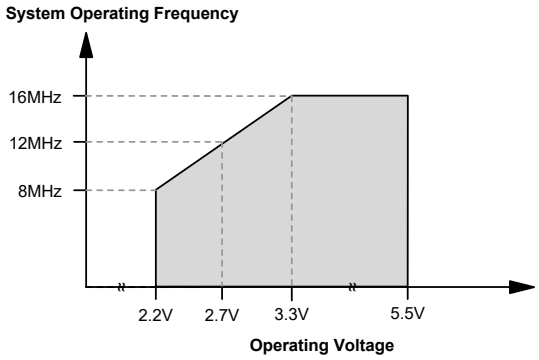

System Start Up Time Characteristics

Ta=-40˚C~85˚C

Symbol	Parameter	Test Conditions		Min.	Typ.	Max.	Unit
		V_{DD}	Conditions				
t_{SST}	System Start-up Time Wake-up from condition where f_{SYS} is off	—	$f_{SYS}=f_H \sim f_H/64$, $f_H=f_{HIRC}$	—	16	—	t_{HIRC}
		—	$f_{SYS}=f_{SUB}=f_{LIRC}$	—	2	—	t_{LIRC}
	System Start-up Time Wake-up from condition where f_{SYS} is on	—	$f_{SYS}=f_H \sim f_H/64$, $f_H=f_{HIRC}$	—	2	—	t_H
		—	$f_{SYS}=f_{SUB}=f_{LIRC}$	—	2	—	t_{SUB}
	System Speed Switch Time FAST to SLOW Mode or SLOW to FAST Mode	—	f_{HIRC} switches from off → on	—	16	—	t_{HIRC}
t_{RSTD}	System Reset Delay Time Reset source from Power-on reset or LVR hardware reset	—	RR_{POR}=5V/ms	42	48	54	ms
	System Reset Delay Time LVRC/WDTC software reset	—	—				
	System Reset Delay Time Reset source from WDT overflow	—	—	14	16	18	ms
t_{SRESET}	Minimum Software Reset Width to Reset	—	—	45	90	120	μs

Note: 1. For the System Start-up time values, whether f_{SYS} is on or off depends upon the mode type and the chosen f_{SYS} system oscillator. Details are provided in the System Operating Modes section.

2. The time units, shown by the symbols t_{HIRC}, t_{SYS} etc. are the inverse of the corresponding frequency values as provided in the frequency tables. For example $t_{HIRC}=1/f_{HIRC}$, $t_{SYS}=1/f_{SYS}$ etc.

3. If the LIRC is used as the system clock and if it is off when in the SLEEP Mode, then an additional LIRC start up time, t_{START}, as provided in the LIRC frequency table, must be added to the t_{SST} time in the table above.

4. The System Speed Switch Time is effectively the time taken for the newly activated oscillator to start up.

Input/Output Characteristics

Ta=25˚C

Symbol	Parameter	Test Conditions		Min.	Typ.	Max.	Unit
		V_{DD}	Conditions				
V_{IL}	Input Low Voltage for I/O Ports or Input Pins	5V	—	0	—	1.5	V
		—		0	—	$0.2V_{DD}$	
V_{IH}	Input High Voltage for I/O Ports or Input Pins	5V	—	3.5	—	5.0	V
		—		$0.8V_{DD}$	—	V_{DD}	
I_{OL}	Sink Current for I/O Pins	3V	$V_{OL}=0.1V_{DD}$	16	32	—	mA
		5V		32	65	—	
I_{OH}	Port Source Current for I/O Pins	3V	$V_{OH}=0.9V_{DD}$	-4	-8	—	mA
		5V		-8	-16	—	
R_{PH}	Pull-high Resistance for I/O Ports (Note)	3V	—	20	60	100	kΩ
		5V		10	30	50	
I_{LEAK}	Input Leakage Current	5V	$V_{IN}=V_{DD}$ or $V_{IN}=V_{SS}$	—	—	±1	μA
t_{TCK}	TM TCK Input Pin Minimum Pulse Width	—	—	0.3	—	—	μs
t_{TPI}	TM TPI Input Pin Minimum Pulse Width	—	—	0.3	—	—	μs

Note: The R_{PH} internal pull high resistance value is calculated by connecting to ground and enabling the input pin with a pull-high resistor and then measuring the input sink current at the specified supply voltage level. Dividing the voltage by this measured current provides the R_{PH} value.

Memory Characteristics

Ta=-40˚C~85˚C

Symbol	Parameter	Test Conditions		Min.	Typ.	Max.	Unit
		V_{DD}	Conditions				
V_{RW}	V_{DD} for Read / Write	—	—	V_{DDmin}	—	V_{DDmax}	V
Flash Program / Data EEPROM Memory							
t_{DEW}	Erase / Write Cycle Time – Flash Program Memory	—	—	—	2	3	ms
	Write Cycle Time – Data EEPROM Memory	—	—	—	4	6	ms
I_{DDPGM}	Programming / Erase Current on V_{DD}	—	—	—	—	5.0	mA
E_P	Cell Endurance – Flash Program Memory	—	—	10K	—	—	E/W
	Cell Endurance – Data EEPROM Memory	—	—	100K	—	—	E/W
t_{RETD}	ROM Data Retention Time	—	Ta=25˚C	—	40	—	Year
RAM Data Memory							
V_{DR}	RAM Data Retention Voltage	—	—	1.0	—	—	V

Note: “E/W” means Erase/Write times.

LVR Electrical Characteristics

Ta=25˚C

Symbol	Parameter	Test Conditions		Min.	Typ.	Max.	Unit
		V_{DD}	Conditions				
V_{LVR}	Low Voltage Reset Voltage	—	LVR enable, voltage select 2.1V	-5%	2.1	+5%	V
		—	LVR enable, voltage select 2.55V		2.55		
		—	LVR enable, voltage select 3.15V		3.15		
		—	LVR enable, voltage select 3.8V		3.8		
I_{LVR}	Additional Current for LVR Enable	3V	LVR disable→LVR enable	—	15	25	μA
		5V		—	20	30	
t_{LVR}	Minimum Low Voltage Width to Reset	—	—	120	240	480	μs

Power-on Reset Characteristics

Ta=25˚C

Symbol	Parameter	Test Conditions		Min.	Typ.	Max.	Unit
		V_{DD}	Conditions				
V_{POR}	V_{DD} Start Voltage to Ensure Power-on Reset	—	—	—	—	100	mV
RR_{POR}	V_{DD} Rising Rate to Ensure Power-on Reset	—	—	0.035	—	—	V/ms
t_{POR}	Minimum Time for V_{DD} Stays at V_{POR} to Ensure Power-on Reset	—	—	1	—	—	ms

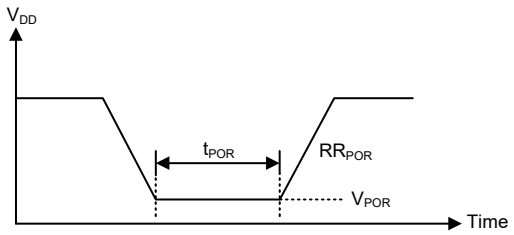

System Architecture

A key factor in the high-performance features of the Holtek range of microcontrollers is attributed to their internal system architecture. The range of these devices take advantage of the usual features found within RISC microcontrollers providing increased speed of operation and enhanced performance. The pipelining scheme is implemented in such a way that instruction fetching and instruction execution are overlapped, hence instructions are effectively executed in one cycle, with the exception of branch or call instructions. An 8-bit wide ALU is used in practically all instruction set operations, which carries out arithmetic operations, logic operations, rotation, increment, decrement, branch decisions, etc. The internal data path is simplified by moving data through the Accumulator and the ALU. Certain internal registers are implemented in the Data Memory and can be directly or indirectly addressed. The simple addressing methods of these registers along with additional architectural features ensure that a minimum of external components is required to provide a functional I/O control system with maximum reliability and flexibility. This makes these devices suitable for low-cost, high-volume production for controller applications.

Clocking and Pipelining

The main system clock, derived from either a HIRC or LIRC oscillator is subdivided into four internally generated non-overlapping clocks, T1~T4. The Program Counter is incremented at the beginning of the T1 clock during which time a new instruction is fetched. The remaining T2~T4 clocks carry out the decoding and execution functions. In this way, one T1~T4 clock cycle forms one instruction cycle. Although the fetching and execution of instructions takes place in consecutive instruction cycles, the pipelining structure of the microcontroller ensures that instructions are effectively executed in one instruction cycle. The exception to this are instructions where the contents of the Program Counter are changed, such as subroutine calls or jumps, in which case the instruction will take one more instruction cycle to execute.

For instructions involving branches, such as jump or call instructions, two machine cycles are required to complete instruction execution. An extra cycle is required as the program takes one cycle to first obtain the actual jump or call address and then another cycle to actually execute the branch. The requirement for this extra cycle should be taken into account by programmers in timing sensitive applications.

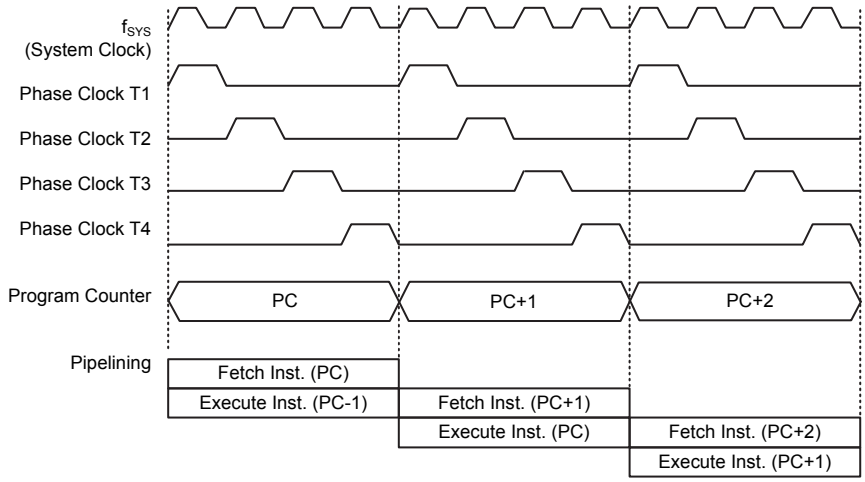

System Clocking and Pipelining

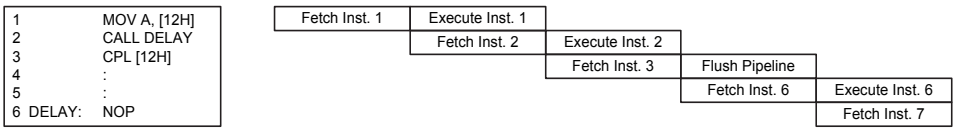

Instruction Fetching

Program Counter

During program execution, the Program Counter is used to keep track of the address of the next instruction to be executed. It is automatically incremented by one each time an instruction is executed except for instructions, such as "JMP" or "CALL" that demand a jump to a non-consecutive Program Memory address. Only the lower 8 bits, known as the Program Counter Low Register, are directly addressable by the application program.

When executing instructions requiring jumps to non-consecutive addresses such as a jump instruction, a subroutine call, interrupt or reset, etc., the microcontroller manages program control by loading the required address into the Program Counter. For conditional skip instructions, once the condition has been met, the next instruction, which has already been fetched during the present instruction execution, is discarded and a dummy cycle takes its place while the correct instruction is obtained.

Program Counter	
High Byte	**Low Byte (PCL)**
PC10~PC8	PCL7~PCL0

Program Counter

The lower byte of the Program Counter, known as the Program Counter Low register or PCL, is available for program control and is a readable and writeable register. By transferring data directly into this register, a short program jump can be executed directly; however, as only this low byte is available for manipulation, the jumps are limited to the present page of memory that is 256 locations. When such program jumps are executed it should also be noted that a dummy cycle will be inserted. Manipulating the PCL register may cause program branching, so an extra cycle is needed to pre-fetch.

Stack

This is a special part of the memory which is used to save the contents of the Program Counter only. The stack has multiple levels and is neither part of the data nor part of the program space, and is neither readable nor writeable. The activated level is indexed by the Stack Pointer, and is neither readable nor writeable. At a subroutine call or interrupt acknowledge signal, the contents of the Program Counter are pushed onto the stack. At the end of a subroutine or an interrupt routine, signaled by a return instruction, RET or RETI, the Program Counter is restored to its previous value from the stack. After a device reset, the Stack Pointer will point to the top of the stack.

If the stack is full and an enabled interrupt takes place, the interrupt request flag will be recorded but the acknowledge signal will be inhibited. When the Stack Pointer is decremented, by RET or RETI, the interrupt will be serviced. This feature prevents stack overflow allowing the programmer to use the structure more easily. However, when the stack is full, a CALL subroutine instruction can still be executed which will result in a stack overflow. Precautions should be taken to avoid such cases which might cause unpredictable program branching.

If the stack is overflow, the first Program Counter save in the stack will be lost.

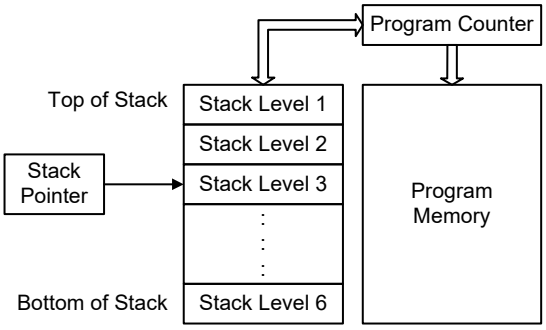

Arithmetic and Logic Unit – ALU

The arithmetic-logic unit or ALU is a critical area of the microcontroller that carries out arithmetic and logic operations of the instruction set. Connected to the main microcontroller data bus, the ALU receives related instruction codes and performs the required arithmetic or logical operations after which the result will be placed in the specified register. As these ALU calculation or operations may result in carry, borrow or other status changes, the status register will be correspondingly updated to reflect these changes. The ALU supports the following functions:

- Arithmetic operations:
  ADD, ADDM, ADC, ADCM, SUB, SUBM, SBC, SBCM, DAA
- Logic operations:
  AND, OR, XOR, ANDM, ORM, XORM, CPL, CPLA
- Rotation:
  RRA, RR, RRCA, RRC, RLA, RL, RLCA, RLC
- Increment and Decrement:
  INCA, INC, DECA, DEC
- Branch decision:
  JMP, SZ, SZA, SNZ, SIZ, SDZ, SIZA, SDZA, CALL, RET, RETI

Flash Program Memory

The Program Memory is the location where the user code or program is stored. For these devices the Program Memory are Flash type, which means it can be programmed and re-programmed a large number of times, allowing the user the convenience of code modification on the same device. By using the appropriate programming tools, the Flash devices offer users the flexibility to conveniently debug and develop their applications while also offering a means of field programming and updating.

Structure

The Program Memory has a capacity of 2K×16 bits. The Program Memory is addressed by the Program Counter and also contains data, table information and interrupt entries. Table data, which can be setup in any location within the Program Memory, is addressed by a separate table pointer register.

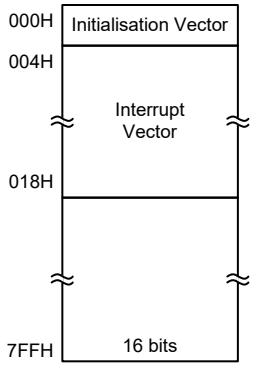

Program Memory Structure

Special Vectors

Within the Program Memory, certain locations are reserved for the reset and interrupts. The location 000H is reserved for use by these devices reset for program initialisation. After a device reset is initiated, the program will jump to this location and begin execution.

Look-up Table

Any location within the Program Memory can be defined as a look-up table where programmers can store fixed data. To use the look-up table, the table pointer must first be setup by placing the address of the look up data to be retrieved in the table pointer register, TBLP and TBHP. These registers define the total address of the look-up table.

After setting up the table pointer, the table data can be retrieved from the Program Memory using the "TABRD [m]" or "TABRDL [m]" instructions, respectively. When the instruction is executed, the lower order table byte from the Program Memory will be transferred to the user defined Data Memory register [m] as specified in the instruction. The higher order table data byte from the Program Memory will be transferred to the TBLH special register.

The accompanying diagram illustrates the addressing data flow of the look-up table.

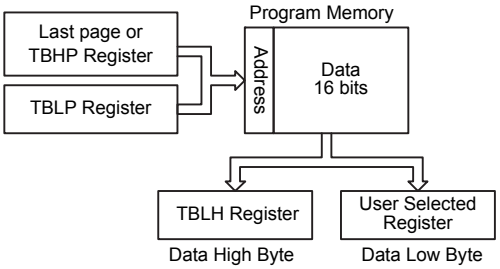

Table Program Example

The following example shows how the table pointer and table data is defined and retrieved from the microcontroller. This example uses raw table data located in the Program Memory which is stored there using the ORG statement. The value at this ORG statement is "700H" which refers to the start address of the last page within the 2K Program Memory of the BS83B08C. The table pointer is setup here to have an initial value of "06H". This will ensure that the first data read from the data table will be at the Program Memory address "706H" or 6 locations after the start of the last page. Note that the value for the table pointer is referenced to the first address specified by TBLP and TBHP if the "TABRD [m]" instruction is being used. The high byte of the table data which in this case is equal to zero will be transferred to the TBLH register automatically when the "TABRD [m]" instruction is executed.

Because the TBLH register is a read-only register and cannot be restored, care should be taken to ensure its protection if both the main routine and Interrupt Service Routine use table read instructions. If using the table read instructions, the Interrupt Service Routines may change the value of the TBLH and subsequently cause errors if used again by the main routine. As a rule it is recommended that simultaneous use of the table read instructions should be avoided. However, in situations where simultaneous use cannot be avoided, the interrupts should be disabled prior to the execution of any main routine table-read instructions. Note that all table related instructions require two instruction cycles to complete their operation.

Table Read Program Example

```
tempreg1 db ?      ; temporary register #1
tempreg2 db ?      ; temporary register #2
:
mov a,06h          ; initialise low table pointer - note that this address is referenced
mov tblp,a         ; to the last page or the page that tbhp pointed
mov a,07h          ; initialise high table pointer
mov tbhp,a
:
tabrd tempreg1     ; transfers value in table referenced by table pointer data at program
                   ; memory address "706H" transferred to tempreg1 and TBLH
dec tblp           ; reduce value of table pointer by one
tabrd tempreg2     ; transfers value in table referenced by table pointer data at program
                   ; memory address "705H" transferred to tempreg2 and TBLH in this example
                   ; the data "1AH" is transferred to tempreg1 and data "0FH" to register
                   ; tempreg2
:
org 700h           ; sets initial address of program memory
dc 00Ah, 00Bh, 00Ch, 00Dh, 00Eh, 00Fh, 01Ah, 01Bh
:
```

In Circuit Programming – ICP

The provision of Flash type Program Memory provides the user with a means of convenient and easy upgrades and modifications to their programs on the same device. As an additional convenience, Holtek has provided a means of programming the microcontroller in-circuit using a 4-pin interface. This provides manufacturers with the possibility of manufacturing their circuit boards complete with a programmed or un-programmed microcontroller, and then programming or upgrading the program at a later stage. This enables product manufacturers to easily keep their manufactured products supplied with the latest program releases without removal and re-insertion of the device.

The Holtek Flash MCU to Writer Programming Pin correspondence table is as follows:

Holtek Write Pins	MCU Programming Pins	Function
ICPDA	PA0	Serial data/address input/output
ICPCK	PA2	Serial Clock input
VDD	VDD	Power Supply
VSS	VSS	Ground

The Program Memory programmed serially in-circuit using this 4-wire interface. Data is downloaded and uploaded serially on a single pin with an additional line for the clock. Two additional lines are required for the power supply. The technical details regarding the in-circuit programming of the device are beyond the scope of this document and will be supplied in supplementary literature.

During the programming process the PA0 and PA2 I/O pins for data and clock programming purposes. The user must there take care to ensure that no other outputs are connected to these two pins.

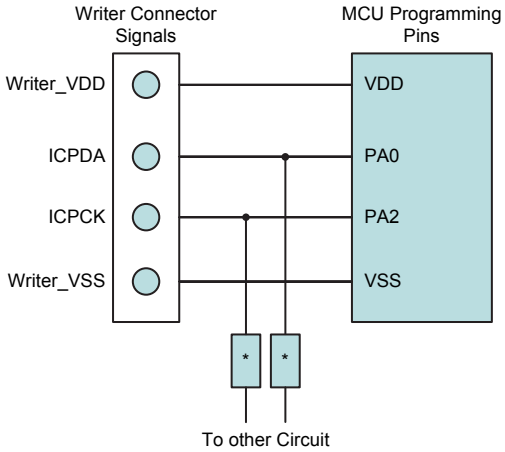

Note: * may be resistor or capacitor. The resistance of * must be greater than 1kΩ or the capacitance of * must be less than 1nF.

On-Chip Debug Support – OCDS

There is an EV chip named BS83BV08C/12C/16C which is used to emulate the BS83B08C/12C/16C device. The EV chip device also provides an "On-Chip Debug" function to debug the real MCU device during the development process. The EV chip and the real MCU device are almost functionally compatible except for "On-Chip Debug" function. Users can use the EV chip device to emulate the real chip device behavior by connecting the OCDSDA and OCDSCK pins to the Holtek HT-IDE development tools. The OCDSDA pin is the OCDS Data/Address input/output pin while the OCDSCK pin is the OCDS clock input pin. When users use the EV chip for debugging, other functions which are shared with the OCDSDA and OCDSCK pins in the real MCU device will have no effect in the EV chip. However, the two OCDS pins which are pin-shared with the ICP programming pins are still used as the Flash Memory programming pins for ICP. For more detailed OCDS information, refer to the corresponding document named "Holtek e-Link for 8-bit MCU OCDS User's Guide".

Holtek e-Link Pins	EV Chip Pins	Pin Description
OCDSDA	OCDSDA	On-Chip Debug Support Data/Address input/output
OCDSCK	OCDSCK	On-Chip Debug Support Clock input
VDD	VDD	Power Supply
VSS	VSS	Ground

Data Memory

The Data Memory is a volatile area of 8-bit wide RAM internal memory and is the location where temporary information is stored.

Structure

Divided into two areas, the first of these is an area of RAM, known as the Special Function Data Memory. Here are located registers which are necessary for correct operation of the device. Many of these registers can be read from and written to directly under program control, however, some remain protected from user manipulation. The second area of Data Memory is known as the General Purpose Data Memory, which is reserved for general purpose use. All locations within this area are read and write accessible under program control.

The overall Data Memory is subdivided into several banks. The Special Purpose Data Memory registers are accessible in all banks, with the exception of the EEC register at address 40H, which is only accessible in Bank 1. Switching between the different Data Memory banks is achieved by setting the Bank Pointer to the correct value. The start address of the Data Memory for all devices is the address 00H.

Device	Special Purpose Data Memory		General Purpose Data Memory	
	Located Banks	Bank: Address	Capacity	Bank: Address
BS83B08C	0,1	0: 00H~5FH 1: 00H~7FH	288×8	0: 60H~FFH 1: 80H~FFH
BS83B12C	0~3	0: 00H~7FH 1: 00H~7FH 2: 00H~7FH 3: 00H~7FH	512×8	0: 80H~FFH 1: 80H~FFH 2: 80H~FFH 3: 80H~FFH
BS83B16C	0~3	0: 00H~7FH 1: 00H~7FH 2: 00H~7FH 3: 00H~7F	512×8	0: 80H~FFH 1: 80H~FFH 2: 80H~FFH 3: 80H~FFH

Data Memory Summary

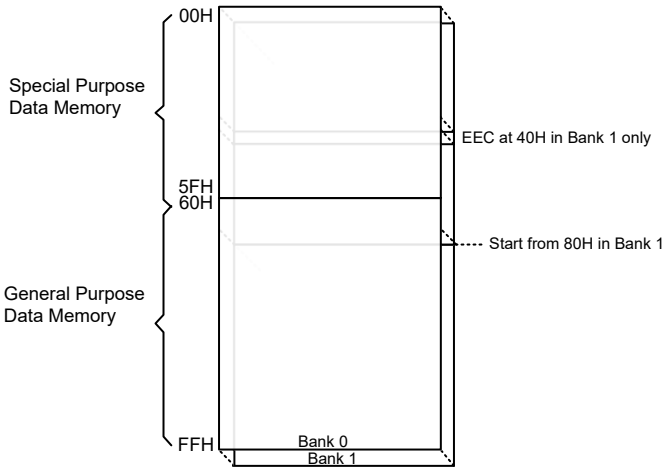

Data Memory Structure − BS83B08C

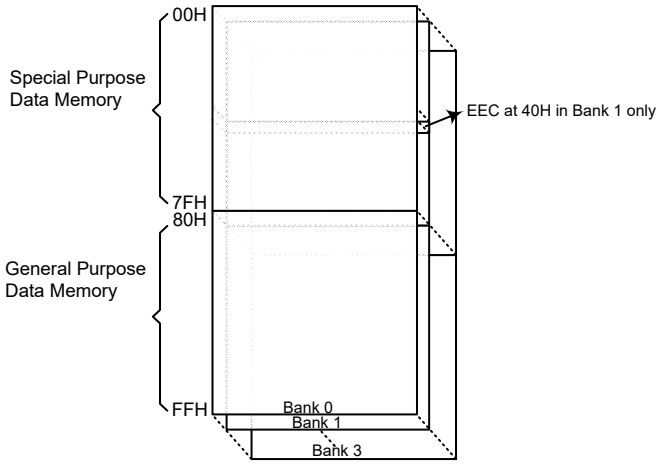

Data Memory Structure − BS83B12C/16C

General Purpose Data Memory

All microcontroller programs require an area of read/write memory where temporary data can be stored and retrieved for use later. It is this area of RAM memory that is known as General Purpose Data Memory. This area of Data Memory is fully accessible by the user programing for both reading and writing operations. By using the bit operation instructions individual bits can be set or reset under program control giving the user a large range of flexibility for bit manipulation in the Data Memory.

Special Purpose Data Memory

This area of Data Memory is where registers, necessary for the correct operation of the microcontroller, are stored. Most of the registers are both readable and writeable but some are protected and are readable only, the details of which are located under the relevant Special Function Register section. Note that for locations that are unused, any read instruction to these addresses will return the value "00H".

	Bank 0	Bank 1
00H	IAR0	
01H	MP0	
02H	IAR1	
03H	MP1	
04H	BP	
05H	ACC	
06H	PCL	
07H	TBLP	
08H	TBLH	
09H	TBHP	
0AH	STATUS	
0BH	SMOD	
0CH	CTRL	
0DH	INTEG	
0EH	INTC0	
0FH	INTC1	
10H		
11H		
12H	MFI	
13H	LVRC	
14H	PA	
15H	PAC	
16H	PAPU	
17H	PAWU	
18H	PXRM	
19H		
1AH	WDTC	
1BH	TBC	
1CH	PSCR	
1DH		
1EH	EEA	
1FH	EED	
20H	PB	
21H	PBC	
22H	PBPU	
23H	SIMTOC	
24H	SIMC0	
25H	SIMC1	
26H	SIMD	
27H	SIMC2/SIMA	
28H		
29H		
2AH		
2BH		
2CH		
2DH		
2EH		
2FH		

	Bank 0	Bank 1
30H		
31H		
32H		
33H		
34H		
35H		
36H		
37H		
38H		
39H		
3AH		
3BH	PTMC0	
3CH	PTMC1	
3DH	PTMDL	
3EH	PTMDH	
3FH	PTMAL	
40H	PTMAH	EEC
41H	PTMRPL	
42H	PTMRPH	
43H	TKTMR	
44H	TKC0	
45H	TK16DL	
46H	TK16DH	
47H	TKC1	
48H	TKM016DL	
49H	TKM016DH	
4AH	TKM0ROL	
4BH	TKM0ROH	
4CH	TKM0C0	
4DH	TKM0C1	
4EH	TKM116DL	
4FH	TKM116DH	
50H	TKM1ROL	
51H	TKM1ROH	
52H	TKM1C0	
53H	TKM1C1	
54H		
55H		
56H		
57H		
58H		
59H		
5AH		
5BH		
5CH		
5DH		
5EH		
5FH		

: Unused, read as 00H.

Note: The address range of the Special Purpose Data Memory for the device Bank 1 is from 00H to 7FH, the address range of 60H~7FH are unused, read as 00H.

Special Purpose Data Memory Structure − BS83B08C

	Bank 0	Bank 1	Bank 2	Bank 3
00H	IAR0			
01H	MP0			
02H	IAR1			
03H	MP1			
04H	BP			
05H	ACC			
06H	PCL			
07H	TBLP			
08H	TBLH			
09H	TBHP			
0AH	STATUS			
0BH	SMOD			
0CH	CTRL			
0DH	INTEG			
0EH	INTC0			
0FH	INTC1			
10H				
11H				
12H	MFI			
13H	LVRC			
14H	PA			
15H	PAC			
16H	PAPU			
17H	PAWU			
18H	PXRM			
19H				
1AH	WDTC			
1BH	TBC			
1CH	PSCR			
1DH				
1EH	EEA			
1FH	EED			
20H	PB			
21H	PBC			
22H	PBPU			
23H	SIMTOC			
24H	SIMC0			
25H	SIMC1			
26H	SIMD			
27H	SIMC2/SIMA			
⋮				
37H				

	Bank 0	Bank 1	Bank 2	Bank 3
38H	PC			
39H	PCC			
3AH	PCPU			
3BH	PTMC0			
3CH	PTMC1			
3DH	PTMDL			
3EH	PTMDH			
3FH	PTMAL			
40H	PTMAH	EEC	PTMAH	PTMAH
41H	PTMRPL			
42H	PTMRPH			
43H	TKTMR			
44H	TKC0			
45H	TK16DL			
46H	TK16DH			
47H	TKC1			
48H	TKM016DL			
49H	TKM016DH			
4AH	TKM0ROL			
4BH	TKM0ROH			
4CH	TKM0C0			
4DH	TKM0C1			
4EH	TKM116DL			
4FH	TKM116DH			
50H	TKM1ROL			
51H	TKM1ROH			
52H	TKM1C0			
53H	TKM1C1			
54H	TKM216DL			
55H	TKM216DH			
56H	TKM2ROL			
57H	TKM2ROH			
58H	TKM2C0			
59H	TKM2C1			
⋮				
7FH				

: Unused, read as 00H.

Note: The address range of the Special Purpose Data Memory for the device Bank 1 is from 00H to 7FH, the address range of 60H~7FH are unused, read as 00H.

Special Purpose Data Memory Structure − BS83B12C

	Bank 0	Bank 1	Bank 2	Bank 3
00H	IAR0			
01H	MP0			
02H	IAR1			
03H	MP1			
04H	BP			
05H	ACC			
06H	PCL			
07H	TBLP			
08H	TBLH			
09H	TBHP			
0AH	STATUS			
0BH	SMOD			
0CH	CTRL			
0DH	INTEG			
0EH	INTC0			
0FH	INTC1			
10H				
11H				
12H	MFI			
13H	LVRC			
14H	PA			
15H	PAC			
16H	PAPU			
17H	PAWU			
18H	PXRM			
19H				
1AH	WDTC			
1BH	TBC			
1CH	PSCR			
1DH				
1EH	EEA			
1FH	EED			
20H	PB			
21H	PBC			
22H	PBPU			
23H	SIMTOC			
24H	SIMC0			
25H	SIMC1			
26H	SIMD			
27H	SIMC2/SIMA			
⋮				
37H				

	Bank 0	Bank 1	Bank 2	Bank 3
38H	PC			
39H	PCC			
3AH	PCPU			
3BH	PTMC0			
3CH	PTMC1			
3DH	PTMDL			
3EH	PTMDH			
3FH	PTMAL			
40H	PTMAH	EEC	PTMAH	PTMAH
41H	PTMRPL			
42H	PTMRPH			
43H	TKTMR			
44H	TKC0			
45H	TK16DL			
46H	TK16DH			
47H	TKC1			
48H	TKM016DL			
49H	TKM016DH			
4AH	TKM0ROL			
4BH	TKM0ROH			
4CH	TKM0C0			
4DH	TKM0C1			
4EH	TKM116DL			
4FH	TKM116DH			
50H	TKM1ROL			
51H	TKM1ROH			
52H	TKM1C0			
53H	TKM1C1			
54H	TKM216DL			
55H	TKM216DH			
56H	TKM2ROL			
57H	TKM2ROH			
58H	TKM2C0			
59H	TKM2C1			
5AH	TKM316DL			
5BH	TKM316DH			
5CH	TKM3ROL			
5DH	TKM3ROH			
5EH	TKM3C0			
5FH	TKM3C1			
60H				
⋮				
7FH				

: Unused, read as 00H.

Note: The address range of the Special Purpose Data Memory for the device Bank 1 is from 00H to 7FH, the address range of 60H~7FH are unused, read as 00H.

Special Purpose Data Memory Structure − BS83B16C

Special Function Register Description

Most of the Special Function Register details will be described in the relevant functional sections, however several registers require a separate description in this section.

Indirect Addressing Register – IAR0, IAR1

The Indirect Addressing Registers, IAR0 and IAR1, although having their locations in normal RAM register space, do not actually physically exist as normal registers. The method of indirect addressing for RAM data manipulation uses these Indirect Addressing Registers and Memory Pointers, in contrast to direct memory addressing, where the actual memory address is specified. Actions on the IAR0 and IAR1 registers will result in no actual read or write operation to these registers but rather to the memory location specified by their corresponding Memory Pointers, MP0 or MP1. Acting as a pair, IAR0 and MP0 can together access data from Bank 0 while the IAR1 and MP1 register pair can access data from any bank. As the Indirect Addressing Registers are not physically implemented, reading the Indirect Addressing Registers indirectly will return a result of "00H" and writing to the registers indirectly will result in no operation.

Memory Pointers – MP0, MP1

Two Memory Pointers, known as MP0 and MP1 are provided. These Memory Pointers are physically implemented in the Data Memory and can be manipulated in the same way as normal registers providing a convenient way with which to address and track data. When any operation to the relevant Indirect Addressing Registers is carried out, the actual address that the microcontroller is directed to, is the address specified by the related Memory Pointer. MP0, together with Indirect Addressing Register, IAR0, are used to access data from Bank 0, while MP1 and IAR1 are used to access data from all banks according to BP register. Direct Addressing can only be used with Bank 0, all other Banks must be addressed indirectly using MP1 and IAR1.

The following example shows how to clear a section of four Data Memory locations already defined as locations adres1 to adres4.

Indirect Addressing Program Example

```
data .section ´data´
adres1   db ?
adres2   db ?
adres3   db ?
adres4   db ?
block    db ?
code .section at 0 ´code´
org 00h
start:
     mov a,04h            ; setup size of block
     mov block,a
     mov a,offset adres1  ; Accumulator loaded with first RAM address
     mov mp0,a            ; setup memory pointer with first RAM address
loop:
     clr IAR0             ; clear the data at address defined by mp0
     inc mp0              ; increment memory pointer
     sdz block            ; check if last memory location has been cleared
     jmp loop
continue:
```

The important point to note here is that in the example shown above, no reference is made to specific Data Memory addresses.

Bank Pointer – BP

For these devices, the Data Memory is divided into several banks. Selecting the required Data Memory area is achieved using the Bank Pointer. Bit 0~1 of the Bank Pointer is used to select Data Memory Banks 0~3.

The Data Memory is initialised to Bank 0 after a reset, except for a WDT time-out reset in the Power Down Mode, in which case, the Data Memory bank remains unaffected. It should be noted that the Special Function Data Memory is not affected by the bank selection, which means that the Special Function Registers can be accessed from within any bank. Directly addressing the Data Memory will always result in Bank 0 being accessed irrespective of the value of the Bank Pointer. Accessing data from Bank 1~3 must be implemented using Indirect Addressing.

- **BP Register – BS83B08C**

Bit	7	6	5	4	3	2	1	0
Name	—	—	—	—	—	—	—	DMBP0
R/W	—	—	—	—	—	—	—	R/W
POR	—	—	—	—	—	—	—	0

Bit 7~1 Unimplemented, read as “0”

Bit 0 **DMBP0**: Select Data Memory Banks
0: Bank 0
1: Bank 1

- **BP Register – BS83B12C/BS83B16C**

Bit	7	6	5	4	3	2	1	0
Name	—	—	—	—	—	—	DMBP1	DMBP0
R/W	—	—	—	—	—	—	R/W	R/W
POR	—	—	—	—	—	—	0	0

Bit 7~2 Unimplemented, read as “0”

Bit 0 **DMBP1~DMBP0**: Select Data Memory Banks
00: Bank 0
01: Bank 1
10: Bank 2
11: Bank 3

Accumulator – ACC

The Accumulator is central to the operation of any microcontroller and is closely related with operations carried out by the ALU. The Accumulator is the place where all intermediate results from the ALU are stored. Without the Accumulator it would be necessary to write the result of each calculation or logical operation such as addition, subtraction, shift, etc., to the Data Memory resulting in higher programming and timing overheads. Data transfer operations usually involve the temporary storage function of the Accumulator; for example, when transferring data between one user defined register and another, it is necessary to do this by passing the data through the Accumulator as no direct transfer between two registers is permitted.

Program Counter Low Register – PCL

To provide additional program control functions, the low byte of the Program Counter is made accessible to programmers by locating it within the Special Purpose area of the Data Memory. By manipulating this register, direct jumps to other program locations are easily implemented. Loading a value directly into this PCL register will cause a jump to the specified Program Memory location, however, as the register is only 8-bit wide, only jumps within the current Program Memory page are permitted. When such operations are used, note that a dummy cycle will be inserted.

Look-up Table Registers – TBLP, TBHP, TBLH

These three special function registers are used to control operation of the look-up table which is stored in the Program Memory. TBLP and TBHP are the table pointers and indicate the location where the table data is located. Their value must be setup before any table read commands are executed. Their value can be changed, for example using the "INC" or "DEC" instructions, allowing for easy table data pointing and reading. TBLH is the location where the high order byte of the table data is stored after a table read data instruction has been executed. Note that the lower order table data byte is transferred to a user defined location.

Status Register – STATUS

This 8-bit register contains the zero flag (Z), carry flag (C), auxiliary carry flag (AC), overflow flag (OV), power down flag (PDF), and watchdog time-out flag (TO). These arithmetic/logical operation and system management flags are used to record the status and operation of the microcontroller.

With the exception of the TO and PDF flags, bits in the status register can be altered by instructions like most other registers. Any data written into the status register will not change the TO or PDF flag. In addition, operations related to the status register may give different results due to the different instruction operations. The TO flag can be affected only by a system power-up, a WDT time-out or by executing the "CLR WDT" or "HALT" instruction. The PDF flag is affected only by executing the "HALT" or "CLR WDT" instruction or during a system power-up.

The Z, OV, AC and C flags generally reflect the status of the latest operations.

- C is set if an operation results in a carry during an addition operation or if a borrow does not take place during a subtraction operation; otherwise C is cleared. C is also affected by a rotate through carry instruction.
- AC is set if an operation results in a carry out of the low nibbles in addition, or no borrow from the high nibble into the low nibble in subtraction; otherwise AC is cleared.
- Z is set if the result of an arithmetic or logical operation is zero; otherwise Z is cleared.
- OV is set if an operation results in a carry into the highest-order bit but not a carry out of the highest-order bit, or vice versa; otherwise OV is cleared.
- PDF is cleared by a system power-up or executing the "CLR WDT" instruction. PDF is set by executing the "HALT" instruction.
- TO is cleared by a system power-up or executing the "CLR WDT" or "HALT" instruction. TO is set by a WDT time-out.

In addition, on entering an interrupt sequence or executing a subroutine call, the status register will not be pushed onto the stack automatically. If the contents of the status registers are important and if the subroutine can corrupt the status register, precautions must be taken to correctly save it.

• **STATUS Register**

Bit	7	6	5	4	3	2	1	0
Name	—	—	TO	PDF	OV	Z	AC	C
R/W	—	—	R	R	R/W	R/W	R/W	R/W
POR	—	—	0	0	x	x	x	x

"x": Unknown

Bit 7~6 Unimplemented, read as "0"

Bit 5 **TO**: Watchdog Time-Out flag
0: After power up or executing the "CLR WDT" or "HALT" instruction
1: A watchdog time-out occurred

Bit 4 **PDF**: Power down flag
0: After power up or executing the "CLR WDT" instruction
1: By executing the "HALT" instruction

Bit 3 **OV**: Overflow flag
0: No overflow
1: An operation results in a carry into the highest-order bit but not a carry out of the highest-order bit or vice versa

Bit 2 **Z**: Zero flag
0: The result of an arithmetic or logical operation is not zero
1: The result of an arithmetic or logical operation is zero

Bit 1 **AC**: Auxiliary flag
0: No auxiliary carry
1: An operation results in a carry out of the low nibbles in addition, or no borrow from the high nibble into the low nibble in subtraction

Bit 0 **C**: Carry flag
0: No carry-out
1: An operation results in a carry during an addition operation or if a borrow does not take place during a subtraction operation

The "C" flag is also affected by a rotate through carry instruction.

EEPROM Data Memory

These devices contain an area of internal EEPROM Data Memory. EEPROM, which stands for Electrically Erasable Programmable Memory, is by its nature a non-volatile form of re-programmable memory, with data retention even when its power supply is removed. By incorporating this kind of data memory, a whole new host of application possibilities are made available to the designer. The availability of EEPROM storage allows information such as product identification numbers, calibration values, specific user data, system setup data or other product information to be stored directly within the product microcontroller. The process of reading and writing data to the EEPROM memory has been reduced to a very trivial affair.

Device	Capacity	Address
BS83B08C	64×8	00H~3FH
BS83B12C		
BS83B16C		

EEPROM Data Memory Structure

The EEPROM Data Memory capacity is 64×8 bits for these devices. Unlike the Program Memory and RAM Data Memory, the EEPROM Data Memory is not directly mapped into memory space and is therefore not directly addressable in the same way as the other types of memory. Read and Write operations to the EEPROM are carried out in single byte operations using an address and a data register in all banks and a single control register in Bank 1.

EEPROM Registers

Three registers control the overall operation of the internal EEPROM Data Memory. These are the address register, EEA, the data register, EED and a single control register, EEC. As both the EEA and EED registers are can located in Bank 0, they can be directly accessed in the same way as any other Special Function Register when they are located in Bank 0. The EEC register, however, being located in Bank 1, can be read from or written to indirectly using the MP1 Memory Pointer and Indirect Addressing Register, IAR1. Because the EEC control register is located at address 40H in Bank 1, the MP1 Memory Pointer must first be set to the value 40H and the Bank Pointer register, BP, set to the value, 01H, before any operations on the EEC register are executed.

Register Name	Bit							
	7	6	5	4	3	2	1	0
EEA	—	—	EEA5	EEA4	EEA3	EEA2	EEA1	EEA0
EED	D7	D6	D5	D4	D3	D2	D1	D0
EEC	—	—	—	—	WREN	WR	RDEN	RD

EEPROM Register List

- **EEA Register**

Bit	7	6	5	4	3	2	1	0
Name	—	—	EEA5	EEA4	EEA3	EEA2	EEA1	EEA0
R/W	—	—	R/W	R/W	R/W	R/W	R/W	R/W
POR	—	—	0	0	0	0	0	0

Bit 7~6 Unimplemented, read as “0”

Bit 5~0 **EEA5~EEA0**: Data EEPROM address
Data EEPROM address bit 5 ~ bit 0

• **EED Register**

Bit	7	6	5	4	3	2	1	0
Name	D7	D6	D5	D4	D3	D2	D1	D0
R/W	R/W	R/W	R/W	R/W	R/W	R/W	R/W	R/W
POR	0	0	0	0	0	0	0	0

Bit 7~0 **D7~D0**: Data EEPROM data
Data EEPROM data bit 7 ~ bit 0

• **EEC Register**

Bit	7	6	5	4	3	2	1	0
Name	—	—	—	—	WREN	WR	RDEN	RD
R/W	—	—	—	—	R/W	R/W	R/W	R/W
POR	—	—	—	—	0	0	0	0

Bit 7~4 Unimplemented, read as "0"

Bit 3 **WREN**: Data EEPROM Write Enable
0: Disable
1: Enable
This is the Data EEPROM Write Enable Bit which must be set high before Data EEPROM write operations are carried out. Clearing this bit to zero will inhibit Data EEPROM write operations.

Bit 2 **WR**: EEPROM Write Control
0: Write cycle has finished
1: Activate a write cycle
This is the Data EEPROM Write Control Bit and when set high by the application program will activate a write cycle. This bit will be automatically reset to zero by the hardware after the write cycle has finished. Setting this bit high will have no effect if the WREN has not first been set high.

Bit 1 **RDEN**: Data EEPROM Read Enable
0: Disable
1: Enable
This is the Data EEPROM Read Enable Bit which must be set high before Data EEPROM read operations are carried out. Clearing this bit to zero will inhibit Data EEPROM read operations.

Bit 0 **RD**: EEPROM Read Control
0: Read cycle has finished
1: Activate a read cycle
This is the Data EEPROM Read Control Bit and when set high by the application program will activate a read cycle. This bit will be automatically reset to zero by the hardware after the read cycle has finished. Setting this bit high will have no effect if the RDEN has not first been set high.

Note: 1. The WREN, WR, RDEN and RD cannot be set high at the same time in one instruction. The WR and RD cannot be set high at the same time.
2. Ensure that the f_{SUB} clock is stable before executing the write operation.
3. Ensure that the write operation is totally complete before changing the contents of the EEPROM related registers.

Reading Data from the EEPROM

To read data from the EEPROM, the read enable bit, RDEN, in the EEC register must first be set high to enable the read function. The EEPROM address of the data to be read must then be placed in the EEA register. If the RD bit in the EEC register is now set high, a read cycle will be initiated. Setting the RD bit high will not initiate a read operation if the RDEN bit has not been set. When the read cycle terminates, the RD bit will be automatically cleared to zero, after which the data can be read from the EED register. The data will remain in the EED register until another read or write operation is executed. The application program can poll the RD bit to determine when the data is valid for reading.

Writing Data to the EEPROM

To write data to the EEPROM, the EEPROM address of the data to be written must first be placed in the EEA register and the data placed in the EED register. Then the write enable bit, WREN, in the EEC register must first be set high to enable the write function. After this, the WR bit in the EEC register must be immediately set high to initiate a write cycle. These two instructions must be executed in two consecutive instruction cycles. The global interrupt bit EMI should also first be cleared before implementing any write operations, and then set again after the write cycle has started. Note that setting the WR bit high will not initiate a write cycle if the WREN bit has not been set. As the EEPROM write cycle is controlled using an internal timer whose operation is asynchronous to microcontroller system clock, a certain time will elapse before the data will have been written into the EEPROM. Detecting when the write cycle has finished can be implemented either by polling the WR bit in the EEC register or by using the EEPROM interrupt. When the write cycle terminates, the WR bit will be automatically cleared to zero by the microcontroller, informing the user that the data has been written to the EEPROM. The application program can therefore poll the WR bit to determine when the write cycle has ended.

Write Protection

Protection against inadvertent write operation is provided in several ways. After these devices are powered-on the Write Enable bit in the control register will be cleared preventing any write operations. Also at power-on the Bank Pointer, BP, will be reset to zero, which means that Data Memory Bank 0 will be selected. As the EEPROM control register is located in Bank 1, this adds a further measure of protection against spurious write operations. During normal program operation, ensuring that the Write Enable bit in the control register is cleared will safeguard against incorrect write operations.

EEPROM Interrupt

The EEPROM write interrupt is generated when an EEPROM write cycle has ended. The EEPROM interrupt must first be enabled by setting the DEE bit in the relevant interrupt register. When an EEPROM write cycle ends, the DEF request flag will be set. If the global, EEPROM interrupt is enabled and the stack is not full, a jump to the associated Interrupt vector will take place. When the interrupt is serviced, the EEPROM interrupt flag will automatically reset. More details can be obtained in the Interrupt section.

Programming Considerations

Care must be taken that data is not inadvertently written to the EEPROM. Protection can be enhanced by ensuring that the Write Enable bit is normally cleared to zero when not writing. Also the Bank Pointer could be normally cleared to zero as this would inhibit access to Bank 1 where the EEPROM control register exist. Although certainly not necessary, consideration might be given in the application program to the checking of the validity of new write data by a simple read back process.

When writing data the WR bit must be set high immediately after the WREN bit has been set high, to ensure the write cycle executes correctly. The global interrupt bit EMI should also be cleared before a write cycle is executed and then re-enabled after the write cycle starts. Note that the device should not enter the IDLE or SLEEP mode until the EEPROM read or write operation is totally complete. Otherwise, the EEPROM read or write operation will fail.

Programming Examples

Reading Data from the EEPROM – Polling Method

```
MOV  A, EEPROM_ADRES      ; user defined address
MOV  EEA, A
MOV  A, 040H              ; setup memory pointer MP1
MOV  MP1, A               ; MP1 points to EEC register
MOV  A, 01H               ; setup Bank Pointer
MOV  BP, A
SET  IAR1.1               ; set RDEN bit, enable read operations
SET  IAR1.0               ; start Read Cycle - set RD bit
BACK:
SZ   IAR1.0               ; check for read cycle end
JMP  BACK
CLR  IAR1                 ; disable EEPROM read if no more read operations are required
CLR  BP
MOV  A, EED               ; move read data to register
MOV  READ_DATA, A
```

Note: For each read operation, the address register should be re-specified followed by setting the RD bit high to activate a read cycle even if the target address is consecutive.

Writing Data to the EEPROM – Polling Method

```
MOV  A, EEPROM_ADRES      ; user defined address
MOV  EEA, A
MOV  A, EEPROM_DATA       ; user defined data
MOV  EED, A
MOV  A, 040H              ; setup memory pointer MP1
MOV  MP1, A               ; MP1 points to EEC register
MOV  A, 01H               ; setup Bank Pointer
MOV  BP, A
CLR  EMI
SET  IAR1.3               ; set WREN bit, enable write operations
SET  IAR1.2               ; start Write Cycle - set WR bit - executed immediately
                          ; after set WREN bit
SET  EMI
BACK:
SZ   IAR1.2               ; check for write cycle end
JMP  BACK
CLR  IAR1                 ; disable EEPROM read/write
CLR  BP
```

Oscillators

Various oscillator options offer the user a wide range of functions according to their various application requirements. The flexible features of the oscillator functions ensure that the best optimisation can be achieved in terms of speed and power saving. Oscillator selections and operation are selected through registers.

Oscillator Overview

In addition to being the source of the main system clock the oscillators also provide clock sources for the Watchdog Timer and Time Base Interrupts. Two fully integrated internal oscillators, requiring no external components, are provided to form a wide range of both fast and slow system oscillators. The higher frequency oscillators provide higher performance but carry with it the disadvantage of higher power requirements, while the opposite is of course true for the lower frequency oscillators. With the capability of dynamically switching between fast and slow system clock, these devices have the flexibility to optimize the performance/power ratio, a feature especially important in power sensitive portable applications.

Type	Name	Frequency
Internal High Speed RC	HIRC	8/12/16MHz
Internal Low Speed RC	LIRC	32kHz

Oscillator Types

System Clock Configurations

There are two methods of generating the system clock, one high speed oscillator and one low speed oscillator. The high speed oscillator is the internal 8/12/16MHz RC oscillator. The low speed oscillator is the internal 32kHz RC oscillator. Selecting whether the low or high speed oscillator is used as the system oscillator is implemented using the HLCLK bit and CKS2~CKS0 bits in the SMOD register and as the system clock can be dynamically selected.

The actual source clock used for the high speed and low speed oscillators is chosen via registers. The frequency of the slow speed or high speed system clock is also determined using the HLCLK bit and CKS2~CKS0 bits in the SMOD register. Note that two oscillator selections must be made namely one high speed and one low speed system oscillators. It is not possible to choose a no-oscillator selection for either the high or low speed oscillator.

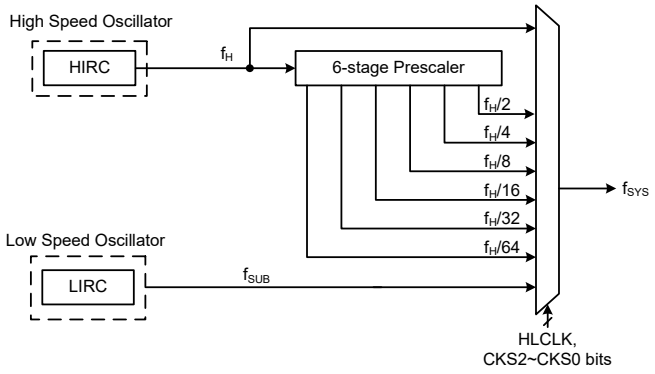

System Clock Configurations

Internal RC Oscillator – HIRC

The internal RC oscillator is a fully integrated system oscillator requiring no external components. The internal RC oscillator has a power on default frequency of 8MHz but can be selected to be either 8MHz, 12MHz, 16MHz using the HIRCS1 and HIRCS0 bits in the CTRL register. Device trimming during the manufacturing process and the inclusion of internal frequency compensation circuits are used to ensure that the influence of the power supply voltage, temperature and process variations on the oscillation frequency are minimised.

Internal 32kHz Oscillator – LIRC

The internal 32kHz System Oscillator is the low frequency oscillator. It is a fully integrated RC oscillator with a typical frequency of 32kHz at 5V, requiring no external components for its implementation. Device trimming during the manufacturing process and the inclusion of internal frequency compensation circuits are used to ensure that the influence of the power supply voltage, temperature and process variations on the oscillation frequency are minimised.

Operating Modes and System Clocks

Present day applications require that their microcontrollers have high performance but often still demand that they consume as little power as possible, conflicting requirements that are especially true in battery powered portable applications. The fast clocks required for high performance will by their nature increase current consumption and of course vice-versa, lower speed clocks reduce current consumption. As Holtek has provided these devices with both high and low speed clock sources and the means to switch between them dynamically, the user can optimise the operation of their microcontroller to achieve the best performance/power ratio.

System Clocks

These devices have many different clock sources for both the CPU and peripheral function operation. By providing the user with a wide range of clock options using register programming, a clock system can be configured to obtain maximum application performance.

The main system clock, can come from either a high frequency f_H or low frequency f_{SUB} source, and is selected using the HLCLK bit and CKS2~CKS0 bits in the SMOD register. The high speed system clock can be sourced from the HIRC oscillator. The low speed system clock source can be sourced from the LIRC oscillator. The other choice, which is a divided version of the high speed system oscillator has a range of $f_H/2$~$f_H/64$.

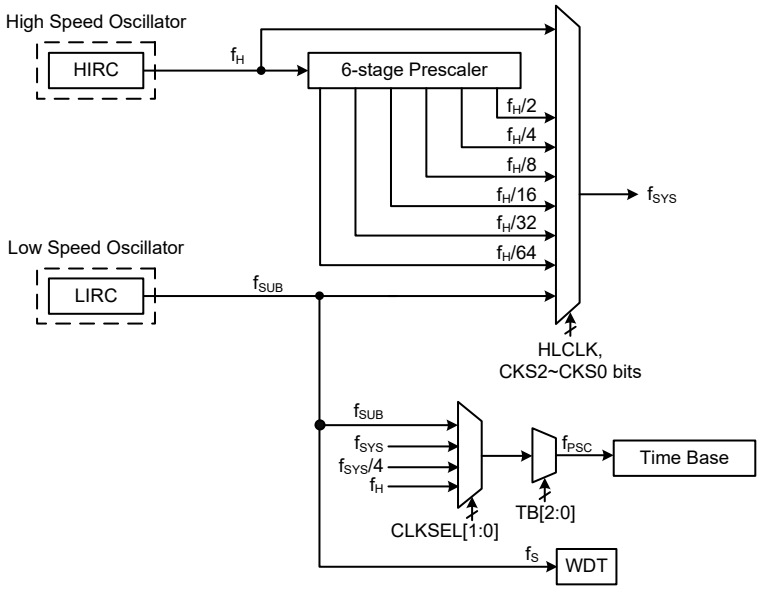

Device Clock Configurations

Note: When the system clock source f_{SYS} is switched to f_{SUB} from f_H, the high speed oscillator can be stopped to conserve the power. Thus there is no f_H~f_H/64 for peripheral circuit to use.

System Operation Modes

There are five different modes of operation for the microcontroller, each one with its own special characteristics and which can be chosen according to the specific performance and power requirements of the application. There are two modes allowing normal operation of the microcontroller, the FAST Mode and SLOW Mode. The remaining three modes, the SLEEP, IDLE0 and IDLE1 Mode are used when the microcontroller CPU is switched off to conserve power.

Operation Mode	Description			
	CPU	f_{SYS}	f_{SUB}	f_S
FAST	On	f_H~f_H/64	On	On
SLOW	On	f_{SUB}	On	On
IDLE0	Off	Off	On	On
IDLE1	Off	On	On	On
SLEEP	Off	Off	On	On

FAST Mode

As the name suggests this is one of the main operating modes where the microcontroller has all of its functions operational and where the system clock is provided by one of the high speed oscillators. This mode operates allowing the microcontroller to operate normally with a clock source will come from the high speed oscillators, HIRC. The high speed oscillator will however first be divided by a ratio ranging from 1 to 64, the actual ratio being selected by the CKS2~CKS0 and HLCLK bits in the SMOD register. Although a high speed oscillator is used, running the microcontroller at a divided clock ratio reduces the operating current.

SLOW Mode

This is also a mode where the microcontroller operates normally although now with a slower speed clock source. The clock source used will be from f_{SUB}. Running the microcontroller in this mode allows it to run with much lower operating currents. In the SLOW Mode, the f_H is off.

SLEEP Mode

The SLEEP Mode is entered when an HALT instruction is executed and when the IDLEN bit in the SMOD register be low. In the SLEEP mode the CPU will be stopped, the f_{SUB} clock will continue to operate since the WDT function is always enable.

IDLE0 Mode

The IDLE0 Mode is entered when a HALT instruction is executed and when the IDLEN bit in the SMOD register is high and the FSYSON bit in the CTRL register is low. In the IDLE0 Mode the system oscillator will be stopped and will therefore be inhibited from driving the CPU.

IDLE1 Mode

The IDLE1 Mode is entered when an HALT instruction is executed and when the IDLEN bit in the SMOD register is high and the FSYSON bit in the CTRL register is high. In the IDLE1 Mode the system oscillator will be inhibited from driving the CPU but may continue to provide a clock source to keep some peripheral functions operational such as the Watchdog Timer and TMs. In the IDLE1 Mode, the system oscillator will continue to run, and this system oscillator may be high speed or low speed system oscillator.

Control Registers

The registers, SMOD and CTRL are used to control the system clock and the corresponding oscillator configurations.

Register Name	Bit							
	7	6	5	4	3	2	1	0
SMOD	CKS2	CKS1	CKS0	—	LTO	HTO	IDLEN	HLCLK
CTRL	FSYSON	—	HIRCS1	HIRCS0	—	LVRF	LRF	WRF

System Operating Mode Control Register List

- **SMOD Register**

Bit	7	6	5	4	3	2	1	0
Name	CKS2	CKS1	CKS0	—	LTO	HTO	IDLEN	HLCLK
R/W	R/W	R/W	R/W	—	R	R	R/W	R/W
POR	0	0	0	—	0	0	1	1

Bit 7~5 **CKS2~CKS0**: System clock selection when HLCLK is “0”
000: f_{SUB} (f_{LIRC})
001: f_{SUB} (f_{LIRC})
010: $f_H/64$
011: $f_H/32$
100: $f_H/16$
101: $f_H/8$
110: $f_H/4$
111: $f_H/2$

These three bits are used to select which clock is used as the system clock source. In addition to the system clock source, which can be LIRC, a divided version of the high speed system oscillator can also be chosen as the system clock source.

Bit 4 Unimplemented, read as “0”

Bit 3 **LTO**: Low system oscillator ready flag
0: Not ready
1: Ready

This is the low speed system oscillator ready flag which indicates when the low speed system oscillator is stable after power on reset or a wake-up has occurred. The flag will change to a high level after 1~2 clock cycles.

Bit 2 **HTO**: High system oscillator ready flag
0: Not ready
1: Ready

This is the high speed system oscillator ready flag which indicates when the high speed system oscillator is stable. This flag is cleared to "0" by hardware when the device is powered on and then changes to a high level after the high speed system oscillator is stable.Therefore this flag will always be read as "1" by the application program after device power-on. The flag will be low when in the SLEEP or IDLE0 Mode but after a wake-up has occurred, the flag will change to a high level after 15~16 clock cycles.

Bit 1 **IDLEN**: IDLE mode control
0: Disable
1: Enable

This is the IDLE mode control bit and determines what happens when the HALT instruction is executed. If this bit is high, when a HALT instruction is executed, the device will enter the IDLE mode. In the IDLE1 mode the CPU will stop running but the system clock will continue to keep the peripheral functions operational, if the FSYSON bit is high. If the FSYSON bit is low, the CPU and the system clock will all stop in IDLE0 mode. If the bit is low, the device will enter the SLEEP mode when a HALT instruction is executed.

Bit 0 **HLCLK**: System clock selection
0: $f_H/2$~$f_H/64$ or f_{SUB}
1: f_H

This bit is used to select if the f_H clock or the $f_H/2$~$f_H/64$ or f_{SUB} clock is used as the system clock. When the bit is high the f_H clock will be selected and if low the $f_H/2$~$f_H/64$ or f_{SUB} clock will be selected. When system clock switches from the f_H clock to the f_{SUB} clock and the f_H clock will be automatically switched off to conserve power.

• CTRL Register

Bit	7	6	5	4	3	2	1	0
Name	FSYSON	—	HIRCS1	HIRCS0	—	LVRF	LRF	WRF
R/W	R/W	—	R/W	R/W	—	R/W	R/W	R/W
POR	0	—	0	0	—	x	0	0

"x": Unknown

Bit 7 **FSYSON**: f_{SYS} Control in IDLE Mode
0: Disable
1: Enable

This bit is used to control whether the system clock is switched on or not in the IDLE Mode. If this bit is set to "0", the system clock will be switched off in the IDLE Mode. However, the system clock will be switched on in the IDLE Mode when the FSYSON bit is set to "1".

Bit 6 Unimplemented, read as "0"

Bit 5~4 **HIRCS1~HIRCS0**: HIRC frequency clock selection
00: 8MHz
01: 16MHz
10: 12MHz
11: 8MHz

Bit 3 Unimplemented, read as "0"

Bit 2 **LVRF**: LVR function reset flag
Describe elsewhere.

Bit 1 **LRF**: LVR control register software reset flag
Described elsewhere.

Bit 0 **WRF**: WDT control register software reset flag
Describe elsewhere.

Operating Mode Switching

These devices can switch between operating modes dynamically allowing the user to select the best performance/power ratio for the present task in hand. In this way microcontroller operations that do not require high performance can be executed using slower clocks thus requiring less operating current and prolonging battery life in portable applications.

In simple terms, Mode Switching between the FAST Mode and SLOW Mode is executed using the HLCLK bit and CKS2~CKS0 bits in the SMOD register while Mode Switching from the FAST/SLOW Modes to the SLEEP/IDLE Modes is executed via the HALT instruction. When a HALT instruction is executed, whether the device enters the IDLE Mode or the SLEEP Mode is determined by the condition of the IDLEN bit in the SMOD register and the FSYSON bit in the CTRL register.

When the HLCLK bit switches to a low level, which implies that clock source is switched from the high speed clock, f_H, to the clock source, $f_H/2$~$f_H/64$ or f_{SUB}. If the clock is from the f_{SUB}, the high speed clock source will stop running to conserve power. When this happens, it must be noted that the $f_H/16$ and $f_H/64$ internal clock sources will also stop running. The accompamying chart shows what happens when the device moves between the various operating modes.

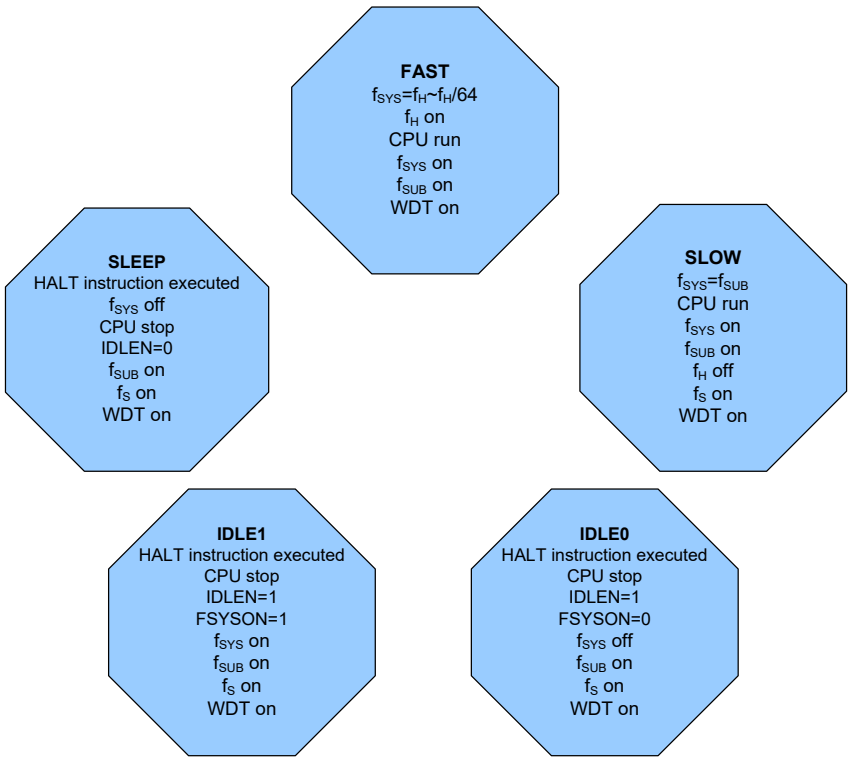

FAST Mode to SLOW Mode Switching

When running in the FAST Mode, which uses the high speed system oscillator, and therefore consumes more power, the system clock can switch to run in the SLOW Mode by set the HLCLK bit to "0" and set the CKS2~CKS0 bits to "000" or "001" in the SMOD register. This will then use the low speed system oscillator which will consume less power. Users may decide to do this for certain operations which do not require high performance and can subsequently reduce power consumption.

The SLOW Mode is sourced from the LIRC oscillator and therefore requires this oscillator to be stable before full mode switching occurs. This is monitored using the LTO bit in the SMOD register.

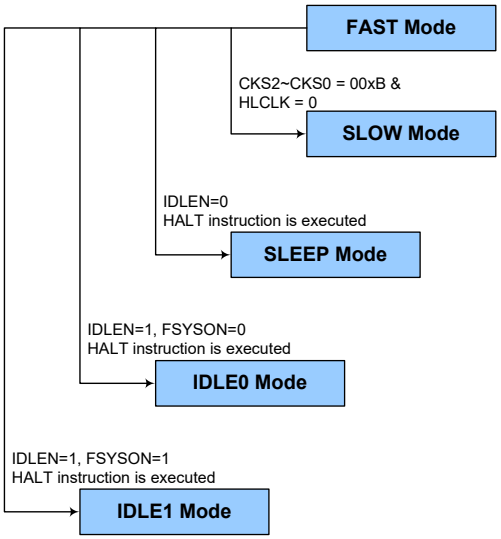

SLOW Mode to FAST Mode Switching

In SLOW mode the system uses the LIRC system oscillator. To switch back to the FAST Mode, where the high speed system oscillator is used, the HLCLK bit should be set to "1" or HLCLK bit is "0", but CKS2~CKS0 field is set to "010", "011", "100", "101", "110" or "111". As a certain amount of time will be required for the high frequency clock to stabilise, the status of the HTO bit is checked.

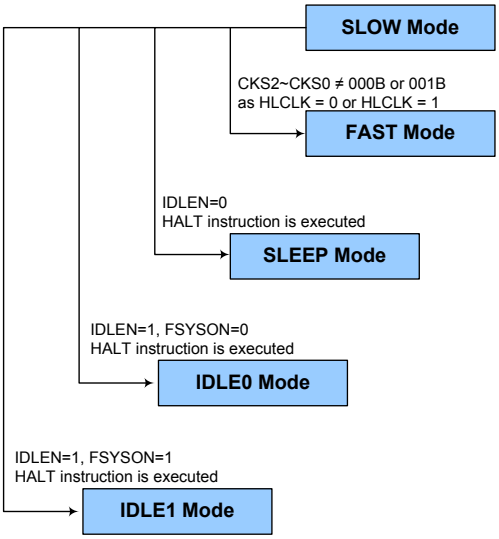

Entering the SLEEP Mode

There is only one way for the device to enter the SLEEP Mode and that is to execute the "HALT" instruction in the application program with the IDLEN bit in the SMOD register equal to "0". When this instruction is executed under the conditions described above, the following will occur:

- The system clock and Time Base clock will be stopped and the application program will stop at the "HALT" instruction, but the f_{SUB} clock will be on.
- The Data Memory contents and registers will maintain their present condition.
- The WDT will be cleared and resume counting since the WDT function is always enable.
- The I/O ports will maintain their present conditions.
- In the status register, the Power Down flag PDF will be set, and WDT timeout flag TO will be cleared.

Entering the IDLE0 Mode

There is only one way for the device to enter the IDLE0 Mode and that is to execute the "HALT" instruction in the application program with the IDLEN bit in the SMOD register equal to "1" and the FSYSON bit in the CTRL register equal to "0". When this instruction is executed under the conditions described above, the following will occur:

- The system clock will be stopped and the application program will stop at the "HALT" instruction, but the Time Base and f_{SUB} clocks will be on.
- The Data Memory contents and registers will maintain their present condition.
- The WDT will be cleared and resume counting since the WDT function is always enable.
- The I/O ports will maintain their present conditions.
- In the status register, the Power Down flag PDF will be set, and WDT timeout flag TO will be cleared.

Entering the IDLE1 Mode

There is only one way for the device to enter the IDLE1 Mode and that is to execute the "HALT" instruction in the application program with the IDLEN bit in the SMOD register equal to "1" and the FSYSON bit in the CTRL register equal to "1". When this instruction is executed under the conditions described above, the following will occur:

- The system clock and the low frequency f_{SUB} clocks will be on but the application program will stop at the "HALT" instruction.
- The Data Memory contents and registers will maintain their present condition.
- The WDT will be cleared and resume counting since the WDT function is always enable.
- The I/O ports will maintain their present conditions.
- In the status register, the Power Down flag PDF will be set, and WDT timeout flag TO will be cleared.

Standby Current Considerations

As the main reason for entering the SLEEP or IDLE Mode is to keep the current consumption of the device to as low a value as possible, perhaps only in the order of several micro-amps except in the IDLE1 Mode, there are other considerations which must also be taken into account by the circuit designer if the power consumption is to be minimised. Special attention must be made to the I/O pins on the device. All high-impedance input pins must be connected to either a fixed high or low level as any floating input pins could create internal oscillations and result in increased current consumption. This also applies to these devices which have different package types, as there may be unbonbed pins. These must either be setup as outputs or if setup as inputs must have pull-high resistors connected.

Care must also be taken with the loads, which are connected to I/O pins, which are setup as outputs. These should be placed in a condition in which minimum current is drawn or connected only to external circuits that do not draw current, such as other CMOS inputs. In the IDLE1 Mode the system oscillator is on, if the system oscillator is from the high speed oscillator, the additional standby current will also be perhaps in the order of several hundred micro-amps.

Wake-up

To minimise power consumption the device can enter the SLEEP or any IDLE Mode, where the CPU will be switched off. However, when the device is woken up again, it will take a considerable time for the original system oscillator to restart, stablise and allow normal operation to resume.

After the system enters the SLEEP or IDLE Mode, it can be woken up from one of various sources listed as follows:

- An external falling edge on Port A
- A system interrupt
- A WDT overflow

If the device is woken up by a WDT overflow, a Watchdog Timer reset will be initiated. The PDF flag is cleared by a system power-up or executing the clear Watchdog Timer instructions and is set when executing the "HALT" instruction. The TO flag is set if a WDT time-out occurs, and causes a wake-up that only resets the Program Counter and Stack Pointer, the other flags remain in their original status.

Each pin on Port A can be setup using the PAWU register to permit a negative transition on the pin to wake up the system. When a Port A pin wake-up occurs, the program will resume execution at the instruction following the "HALT" instruction. If the system is woken up by an interrupt, then two possible situations may occur. The first is where the related interrupt is disabled or the interrupt is enabled but the stack is full, in which case the program will resume execution at the instruction following the "HALT" instruction. In this situation, the interrupt which woke up the device will not be immediately serviced, but will rather be serviced later when the related interrupt is finally enabled or when a stack level becomes free. The other situation is where the related interrupt is enabled and the stack is not full, in which case the regular interrupt response takes place. If an interrupt request flag is set high before entering the SLEEP or IDLE Mode, the wake-up function of the related interrupt will be disabled.

Programming Considerations

The high speed and low speed oscillators both use the same SST counter. For example, if the system is woken up from the SLEEP Mode the HIRC oscillator need to start-up from an off state.

If the device is woken up from the SLEEP Mode to the FAST Mode, the high speed system oscillator needs an SST period. The device will execute first instruction after HTO is high.

Watchdog Timer

The Watchdog Timer is provided to prevent program malfunctions or sequences from jumping to unknown locations, due to certain uncontrollable external events such as electrical noise.

Watchdog Timer Clock Source

The Watchdog Timer clock source is provided by the internal clock, f_{SUB}, which is sourced from the LIRC oscillator. The LIRC internal oscillator has an approximate period of 32kHz at a supply voltage of 5V. However, it should be noted that this specified internal clock period can vary with V_{DD}, temperature and process variations. The Watchdog Timer source clock is then subdivided by a ratio of 2^8 to 2^{18} to give longer timeouts, the actual value being chosen using the WS2~WS0 bits in the WDTC register.

Watchdog Timer Control Register

A single register, WDTC, controls the required timeout period as well as the enable and reset MCU operation. The WDTC register is initiated to 01010011B at any reset except WDT time-out hardware warm reset.

- **WDTC Register**

Bit	7	6	5	4	3	2	1	0
Name	WE4	WE3	WE2	WE1	WE0	WS2	WS1	WS0
R/W	R/W	R/W	R/W	R/W	R/W	R/W	R/W	R/W
POR	0	1	0	1	0	0	1	1

Bit 7~3 **WE4~WE0**: WDT function software control
01010/10101: Enable
Others: Reset MCU
When these bits are changed to any other values due to environmental noise the microcontroller will be reset; this reset operation will be activated after a delay time, t_{SRESET} and the WRF bit in the CTRL register will be set high.

Bit 2~0 **WS2~WS0**: WDT time-out period selection
000: $2^8/f_{SUB}$
001: $2^{10}/f_{SUB}$
010: $2^{12}/f_{SUB}$
011: $2^{14}/f_{SUB}$
100: $2^{15}/f_{SUB}$
101: $2^{16}/f_{SUB}$
110: $2^{17}/f_{SUB}$
111: $2^{18}/f_{SUB}$
These three bits determine the division ratio of the watchdog timer source clock, which in turn determines the time-out period.

• **CTRL Register**

Bit	7	6	5	4	3	2	1	0
Name	FSYSON	—	HIRCS1	HIRCS0	—	LVRF	LRF	WRF
R/W	R/W	—	R/W	R/W	—	R/W	R/W	R/W
POR	0	—	0	0	—	x	0	0

"x": Unknown

Bit 7 **FSYSON**: f_{SYS} Control in IDLE Mode
Describe elsewhere.

Bit 6 Unimplemented, read as "0"

Bit 5~4 **HIRCS1~HIRCS0**: HIRC frequency clock select
Describe elsewhere.

Bit 3 Unimplemented, read as "0"

Bit 2 **LVRF**: LVR function reset flag
Describe elsewhere.

Bit 1 **LRF**: LVR control register software reset flag
Described elsewhere.

Bit 0 **WRF**: WDT Control register software reset flag
0: Not occur
1: Occurred
This bit is set high by the WDT Control register software reset and cleared to zero by the application program. Note that this bit can only be cleared to zero by the application program.

Watchdog Timer Operation

The Watchdog Timer operates by providing a device reset when its timer overflows. This means that in the application program and during normal operation the user has to strategically clear the Watchdog Timer before it overflows to prevent the Watchdog Timer from executing a reset. This is done using the clear watchdog instructions. If the program malfunctions for whatever reason, jumps to an unknown location, or enters an endless loop, these clear instructions will not be executed in the correct manner, in which case the Watchdog Timer will overflow and reset the device. There are five bits, WE4~WE0, in the WDTC register to offer the enable control and reset control of the Watchdog Timer. The WDT function will be enabled when the WE4~WE0 bits are set to a value of 10101B or 01010B. If the WE4~WE0 bits are set to any other values, other than 01010B and 10101B, it will reset the device after a delay time, t_{SRESET}. After power on these bits will have a value of 01010B.

WE4~WE0 Bits	WDT Function
10101B/01010B	Enable
Any other values	Reset MCU

Watchdog Timer Enable/Reset Control

Under normal program operation, a Watchdog Timer time-out will initialise a device reset and set the status bit TO. However, if the system is in the SLEEP or IDLE Mode, when a Watchdog Timer time-out occurs, the TO bit in the status register will be set and only the Program Counter and Stack Pointer will be reset. Three methods can be adopted to clear the contents of the Watchdog Timer. The first is a WDT reset, which means a certain value except 01010B and 10101B written into the WE4~WE0 bit filed, the second is using the Watchdog Timer software clear instruction and the third is via a HALT instruction.

There is only one method of using software instruction to clear the Watchdog Timer. That is to use the single "CLR WDT" instruction to clear the WDT.

The maximum time out period is when the 2^{18} division ratio is selected. As an example, with a 32kHz LIRC oscillator as its source clock, this will give a maximum watchdog period of around 8 second for the 2^{18} division ratio, and a minimum timeout of 8ms for the 2^{8} division ration.

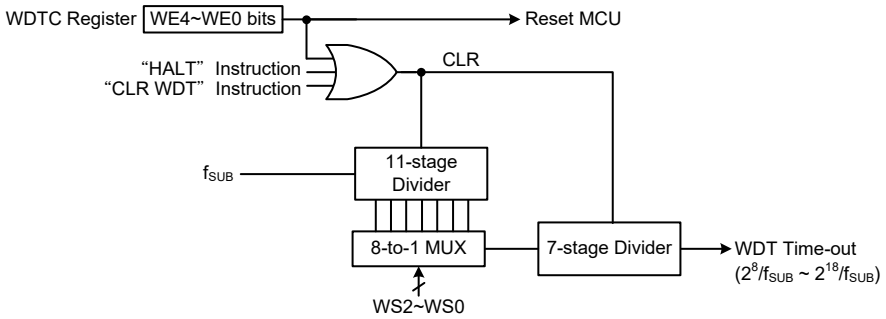

Watchdog Timer

Reset and Initialisation

A reset function is a fundamental part of any microcontroller ensuring that the device can be set to some predetermined condition irrespective of outside parameters. The most important reset condition is after power is first applied to the microcontroller. In this case, internal circuitry will ensure that the microcontroller, after a short delay, will be in a well-defined state and ready to execute the first program instruction. After this power-on reset, certain important internal registers will be set to defined states before the program commences. One of these registers is the Program Counter, which will be reset to zero forcing the microcontroller to begin program execution from the lowest Program Memory address.

In addition to the power-on reset, another reset exists in the form of a Low Voltage Reset, LVR, where a full reset is implemented in situations where the power supply voltage falls below a certain threshold. Another type of reset is when the Watchdog Timer overflows and resets the microcontroller. All types of reset operations result in different register conditions being setup.

Reset Functions

There are several ways in which a microcontroller reset can occur, through events occurring internally.

Power-on Reset

The most fundamental and unavoidable reset is the one that occurs after power is first applied to the microcontroller. As well as ensuring that the Program Memory begins execution from the first memory address, a power-on reset also ensures that certain other registers are preset to known conditions. All the I/O port and port control registers will power up in a high condition ensuring that all I/O ports will be first set to inputs.

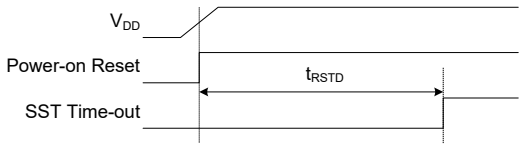

Note: t_{RSTD} is power-on delay, typical time = 48ms

Power-On Reset Timing Chart

Low Voltage Reset – LVR

The microcontroller contains a low voltage reset circuit in order to monitor the supply voltage of the device. The LVR function is always enabled with a specific LVR voltage V_{LVR}. If the supply voltage of the device drops to within a range of 0.9V~V_{LVR} such as might occur when changing the battery, the LVR will automatically reset the device internally and the LVRF bit in the CTRL register will also be set high. For a valid LVR signal, a low supply voltage, i.e., a voltage in the range between 0.9V~V_{LVR} must exist for a time greater than that specified by t_{LVR} in the LVR Electrical Characteristics. If the low supply voltage state does not exceed this value, the LVR will ignore the low supply voltage and will not perform a reset function. The actual V_{LVR} value can be selected by the LVS7~LVS0 bits in the LVRC register. If the LVS7~LVS0 bits are changed to some certain values by the environmental noise or software setting, the LVR will reset the device after a delay time, t_{SRESET}. When this happens, the LRF bit in the CTRL register will be set high. After power on the register will have the value of 01010101B. Note that the LVR function will be automatically disabled when the device enters the SLEEP or IDLE mode.

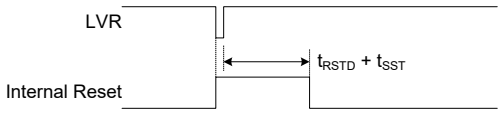

Note: t_{RSTD} is power-on delay, typical time = 48ms

Low Voltage Reset Timing Chart

- **LVRC Register**

Bit	7	6	5	4	3	2	1	0
Name	LVS7	LVS6	LVS5	LVS4	LVS3	LVS2	LVS1	LVS0
R/W	R/W	R/W	R/W	R/W	R/W	R/W	R/W	R/W
POR	0	1	0	1	0	1	0	1

Bit 7~0 **LVS7~LVS0**: LVR Voltage Select control
01010101: 2.1V
00110011: 2.55V
10011001: 3.15V
10101010: 3.8V
Any other value: Generates MCU reset – register is reset to POR value

When an actual low voltage condition occurs, as specified by one of the four defined LVR voltage values above, an MCU reset will be generated. The reset operation will be activated after the low voltage condition keeps more than a t_{LVR} time. In this situation the register contents will remain the same after such a reset occurs.

Any register value, other than the four defined LVR values above, will also result in the generation of an MCU reset. The reset operation will be activated after a delay time, t_{SRESET}. However in this situation the register contents will be reset to the POR value.

- **CTRL Register**

Bit	7	6	5	4	3	2	1	0
Name	FSYSON	—	HIRCS1	HIRCS0	—	LVRF	LRF	WRF
R/W	R/W	—	R/W	R/W	—	R/W	R/W	R/W
POR	0	—	0	0	—	x	0	0

"x": Unknown

Bit 7 **FSYSON**: f_{SYS} Control in IDLE Mode
Describe elsewhere.

Bit 6 Unimplemented, read as "0"

Bit 5~4 **HIRCS1~HIRCS0**: HIRC frequency clock select
Describe elsewhere.

Bit 3 Unimplemented, read as "0"

Bit 2 **LVRF**: LVR function reset flag
0: Not occur
1: Occurred
This bit is set high when a specific Low Voltage Reset situation condition occurs. This bit can only be cleared to zero by the application program.

Bit 1 **LRF**: LVR control register software reset flag
0: Not occur
1: Occurred
This bit is set to 1 if the LVRC register contains any non-defined LVR voltage register values. This in effect acts like a software-reset function. This bit can only be cleared to 0 by the application program.

Bit 0 **WRF**: WDT Control register software reset flag
Describe elsewhere.

Watchdog Time-out Reset during Normal Operation

When the Watchdog Time-out Reset during normal operation in the FAST or SLOW mode occurs, the Watchdog time-out flag TO will be set to "1".

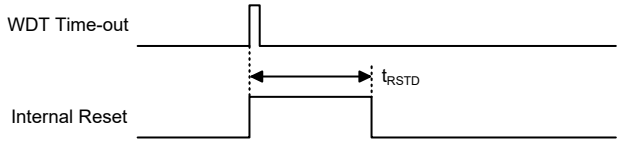

Note: t_{RSTD} is power-on delay, typical time = 16ms

WDT Time-out Reset during Normal Operation Timing Chart

Watchdog Time-out Reset during SLEEP or IDLE Mode

The Watchdog time-out Reset during SLEEP or IDLE Mode is a little different from other kinds of reset. Most of the conditions remain unchanged except that the Program Counter and the Stack Pointer will be cleared to zero and the TO and PDF flags will be set high. Refer to the System Start Up Time Characteristics for t_{SST} details.

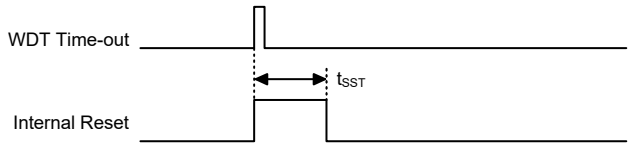

WDT Time-out Reset during Sleep or IDLE Mode Timing Chart

Reset Initial Conditions

The different types of reset described affect the reset flags in different ways. These flags, known as PDF and TO are located in the status register and are controlled by various microcontroller operations, such as the SLEEP or IDLE Mode function or Watchdog Timer. The reset flags are shown in the table:

TO	PDF	Reset Conditions
0	0	Power-on reset
u	u	LVR reset during FAST or SLOW Mode operation
1	u	WDT time-out reset during FAST or SLOW Mode operation
1	1	WDT time-out reset during IDLE or SLEEP Mode operation

"u" stands for unchanged

The following table indicates the way in which the various components of the microcontroller are affected after a power-on reset occurs.

Item	Condition after Reset
Program Counter	Reset to zero
Interrupts	All interrupts will be disabled
WDT, Time Base	Clear after reset, WDT begins counting
Timer Module	Timer Module will be turned off
Input/Output Ports	I/O ports will be setup as inputs
Stack Pointer	Stack Pointer will point to the top of the stack

The different kinds of resets all affect the internal registers of the microcontroller in different ways. To ensure reliable continuation of normal program execution after a reset occurs, it is important to know what condition the microcontroller is in after a particular reset occurs. The following table describes how each type of reset affects each of the microcontroller internal registers.

Register	BS83B08C	BS83B12C	BS83B16C	Reset (Power On)	LVR Reset (Normal Operation)	WDT Time-out (Normal Operation)	WDT Time-out (SLEEP or IDLE)
IAR0	●	●	●	xxxxxxxx	xxxxxxxx	xxxxxxxx	uuuuuuuu
MP0	●	●	●	xxxxxxxx	xxxxxxxx	xxxxxxxx	uuuuuuuu
IAR1	●	●	●	xxxxxxxx	xxxxxxxx	xxxxxxxx	uuuuuuuu
MP1	●	●	●	xxxxxxxx	xxxxxxxx	xxxxxxxx	uuuuuuuu
BP	●			---- ---0	---- ---0	---- ---0	---- ---u
		●	●	---- --00	---- --00	---- --00	---- --uu
ACC	●	●	●	xxxxxxxx	uuuuuuuu	uuuuuuuu	uuuuuuuu
PCL	●	●	●	0000 0000	0000 0000	0000 0000	0000 0000
TBLP	●	●	●	xxxxxxxx	uuuuuuuu	uuuuuuuu	uuuuuuuu
TBLH	●	●	●	xxxxxxxx	uuuuuuuu	uuuuuuuu	uuuuuuuu
TBHP	●	●	●	---- -xxx	---- -uuu	---- -uuu	---- -uuu
STATUS	●	●	●	--00 xxxx	--uuuuuu	--1u uuuu	--11uuuu
SMOD	●	●	●	000- 0011	000- 0011	000- 0011	uuu- uuuu
CTRL	●	●	●	0-00 -x00	0-00 -100	0-00 -x00	u-uu --uu
LVRC	●	●	●	0101 0101	0101 0101	0101 0101	uuuuuuuu
INTEG	●	●	●	---- --00	---- --00	---- --00	---- --uu
INTC0	●	●	●	-000 0000	-000 0000	-000 0000	-uuuuuuu
INTC1	●	●	●	-000 -000	-000 -000	-000 -000	-uuu -uuu
MFI	●	●	●	--00 --00	--00 --00	--00 --00	--uu --uu
PA	●	●	●	1--1 1111	1--1 1111	1--1 1111	u--uuuuu
PAC	●	●	●	1--1 1111	1--1 1111	1--1 1111	u--uuuuu
PAPU	●	●	●	0--0 0000	0--0 0000	0--0 0000	u--uuuuu
PAWU	●	●	●	0--0 0000	0--0 0000	0--0 0000	u--uuuuu
PXRM	●	●	●	00-- ---00	---- ---00	---- ---00	---- ---uu
WDTC	●	●	●	0101 0011	0101 0011	0101 0011	uuuuuuuu
TBC	●	●	●	---- 0000	---- 0000	---- 0000	----uuuu
PSCR	●	●	●	---- –00	---- –00	---- –00	---- --uu
EEA	●	●	●	--00 0000	--00 0000	--00 0000	--uuuuuu
EED	●	●	●	0000 0000	0000 0000	0000 0000	uuuuuuuu
PB	●	●	●	1111 1111	1111 1111	1111 1111	uuuuuuuu
PBC	●	●	●	1111 1111	1111 1111	1111 1111	uuuuuuuu
PBPU	●	●	●	0000 0000	0000 0000	0000 0000	uuuuuuuu

Register	BS83B08C	BS83B12C	BS83B16C	Reset (Power On)	LVR Reset (Normal Operation)	WDT Time-out (Normal Operation)	WDT Time-out (SLEEP or IDLE)
SIMTOC	●	●	●	0000 0000	0000 0000	0000 0000	uuuuuuuu
SIMC0	●	●	●	111- 0000	111- 0000	111- 0000	uuu- uuuu
SIMC1	●	●	●	1000 0001	1000 0001	1000 0001	uuuuuuuu
SIMD	●	●	●	xxxxxxxx	xxxxxxxx	xxxxxxxx	uuuuuuuu
SIMA/SIMC2	●	●	●	0000 0000	0000 0000	0000 0000	uuuuuuuu
PC		●		---- 1111	---- 1111	---- 1111	---- uuuu
PCC		●		---- 1111	---- 1111	---- 1111	----uuuu
PCPU		●		---- 0000	---- 0000	---- 0000	----uuuu
PC			●	1111 1111	1111 1111	1111 1111	uuuuuuuu
PCC			●	1111 1111	1111 1111	1111 1111	uuuuuuuu
PCPU			●	0000 0000	0000 0000	0000 0000	uuuuuuuu
PTMC0	●	●	●	0000 0---	0000 0---	0000 0---	uuuu u---
PTMC1	●	●	●	0000 0000	0000 0000	0000 0000	uuuuuuuu
PTMDL	●	●	●	0000 0000	0000 0000	0000 0000	uuuuuuuu
PTMDH	●	●	●	---- --00	---- --00	---- --00	---- --uu
PTMAL	●	●	●	0000 0000	0000 0000	0000 0000	uuuuuuuu
PTMAH	●	●	●	---- --00	---- --00	---- --00	---- --uu
PTMRPL	●	●	●	0000 0000	0000 0000	0000 0000	uuuuuuuu
PTMRPH	●	●	●	---- --00	---- --00	---- --00	---- --uu
TKTMR	●	●	●	0000 0000	0000 0000	0000 0000	uuuuuuuu
TKC0	●	●	●	-000 0000	-000 0000	-000 0000	-uuuuuuu
TK16DL	●	●	●	0000 0000	0000 0000	0000 0000	uuuuuuuu
TK16DH	●	●	●	0000 0000	0000 0000	0000 0000	uuuuuuuu
TKC1	●	●	●	---- --11	---- --11	---- --11	---- --uu
TKM016DL	●	●	●	0000 0000	0000 0000	0000 0000	uuuuuuuu
TKM016DH	●	●	●	0000 0000	0000 0000	0000 0000	uuuuuuuu
TKM0ROL	●	●	●	0000 0000	0000 0000	0000 0000	uuuuuuuu
TKM0ROH	●	●	●	---- --00	---- --00	---- --00	---- --uu
TKM0C0	●	●	●	0000 0000	0000 0000	0000 0000	uuuuuuuu
TKM0C1	●	●	●	0-00 0000	0-00 0000	0-00 0000	u-uuuuuu
TKM116DL	●	●	●	0000 0000	0000 0000	0000 0000	uuuuuuuu
TKM116DH	●	●	●	0000 0000	0000 0000	0000 0000	uuuuuuuu
TKM1ROL	●	●	●	0000 0000	0000 0000	0000 0000	uuuuuuuu
TKM1ROH	●	●	●	---- --00	---- --00	---- --00	---- --uu
TKM1C0	●	●	●	0000 0000	0000 0000	0000 0000	uuuuuuuu
TKM1C1	●	●	●	0-00 0000	0-00 0000	0-00 0000	u-uuuuuu
TKM216DL		●	●	0000 0000	0000 0000	0000 0000	uuuuuuuu
TKM216DH		●	●	0000 0000	0000 0000	0000 0000	uuuuuuuu
TKM2ROL		●	●	0000 0000	0000 0000	0000 0000	uuuuuuuu
TKM2ROH		●	●	---- --00	---- --00	---- --00	---- --uu
TKM2C0		●	●	0000 0000	0000 0000	0000 0000	uuuuuuuu
TKM2C1		●	●	0-00 0000	0-00 0000	0-00 0000	u-uuuuuu
TKM316DL			●	0000 0000	0000 0000	0000 0000	uuuuuuuu
TKM316DH			●	0000 0000	0000 0000	0000 0000	uuuuuuuu
TKM3ROL			●	0000 0000	0000 0000	0000 0000	uuuuuuuu
TKM3ROH			●	---- --00	---- --00	---- --00	---- --uu
TKM3C0			●	0000 0000	0000 0000	0000 0000	uuuuuuuu

Register	BS83B08C	BS83B12C	BS83B16C	Reset (Power On)	LVR Reset (Normal Operation)	WDT Time-out (Normal Operation)	WDT Time-out (SLEEP or IDLE)
TKM3C1			●	0-00 0000	0-00 0000	0-00 0000	u-uuuuuu
EEC	●	●	●	---- 0000	---- 0000	---- 0000	---- uuuu

Note: “u” stands for unchanged
“x” stands for unknown
“-” stands for unimplemented

Input/Output Ports

Holtek microcontrollers offer considerable flexibility on their I/O ports. With the input or output designation of every pin fully under user program control, pull-high selections for all ports and wake-up selections on certain pins, the user is provided with an I/O structure to meet the needs of a wide range of application possibilities.

These devices provide bidirectional input/output lines labeled with port names PA~PC. These I/O ports are mapped to the RAM Data Memory with specific addresses as shown in the Special Purpose Data Memory table. All of these I/O ports can be used for input and output operations. For input operation, these ports are non-latching, which means the inputs must be ready at the T2 rising edge of instruction "MOV A, [m]", where m denotes the port address. For output operation, all the data is latched and remains unchanged until the output latch is rewritten.

Register Name	Bit							
	7	6	5	4	3	2	1	0
PA	PA7	—	—	PA4	PA3	PA2	PA1	PA0
PAC	PAC7	—	—	PAC4	PAC3	PAC2	PAC1	PAC0
PAPU	PAPU7	—	—	PAPU4	PAPU3	PAPU2	PAPU1	PAPU0
PAWU	PAWU7	—	—	PAWU4	PAWU3	PAWU2	PAWU1	PAWU0
PB	PB7	PB6	PB5	PB4	PB3	PB2	PB1	PB0
PBC	PBC7	PBC6	PBC5	PBC4	PBC3	PBC2	PBC1	PBC0
PBPU	PBPU7	PBPU6	PBPU5	PBPU4	PBPU3	PBPU2	PBPU1	PBPU0

“1”: Unimplemented, read as “0”

I/O Logic Function Register List − BS83B08C

Register Name	Bit							
	7	6	5	4	3	2	1	0
PA	PA7	—	—	PA4	PA3	PA2	PA1	PA0
PAC	PAC7	—	—	PAC4	PAC3	PAC2	PAC1	PAC0
PAPU	PAPU7	—	—	PAPU4	PAPU3	PAPU2	PAPU1	PAPU0
PAWU	PAWU7	—	—	PAWU4	PAWU3	PAWU2	PAWU1	PAWU0
PB	PB7	PB6	PB5	PB4	PB3	PB2	PB1	PB0
PBC	PBC7	PBC6	PBC5	PBC4	PBC3	PBC2	PBC1	PBC0
PBPU	PBPU7	PBPU6	PBPU5	PBPU4	PBPU3	PBPU2	PBPU1	PBPU0
PC	—	—	—	—	PC3	PC2	PC1	PC0
PCC	—	—	—	—	PCC3	PCC2	PCC1	PCC0
PCPU	—	—	—	—	PCPU3	PCPU2	PCPU1	PCPU0

“1”: Unimplemented, read as “0”

I/O Logic Function Register List − BS83B12C

Register Name	Bit							
	7	6	5	4	3	2	1	0
PA	PA7	—	—	PA4	PA3	PA2	PA1	PA0
PAC	PAC7	—	—	PAC4	PAC3	PAC2	PAC1	PAC0
PAPU	PAPU7	—	—	PAPU4	PAPU3	PAPU2	PAPU1	PAPU0
PAWU	PAWU7	—	—	PAWU4	PAWU3	PAWU2	PAWU1	PAWU0
PB	PB7	PB6	PB5	PB4	PB3	PB2	PB1	PB0
PBC	PBC7	PBC6	PBC5	PBC4	PBC3	PBC2	PBC1	PBC0
PBPU	PBPU7	PBPU6	PBPU5	PBPU4	PBPU3	PBPU2	PBPU1	PBPU0
PC	PC7	PC6	PC5	PC4	PC3	PC2	PC1	PC0
PCC	PCC7	PCC6	PCC5	PCC4	PCC3	PCC2	PCC1	PCC0
PCPU	PCPU7	PCPU6	PCPU5	PCPU4	PCPU3	PCPU2	PCPU1	PCPU0

"—": Unimplemented, read as "0"

I/O Logic Function Register List − BS83B16C

Pull-high Resistors

Many product applications require pull-high resistors for their switch inputs usually requiring the use of an external resistor. To eliminate the need for these external resistors, all I/O pins, when configured as an input have the capability of being connected to an internal pull-high resistor. These pull-high resistors are selected using registers PAPU~PCPU, and are implemented using weak PMOS transistors.

- **PxPU Register**

Bit	7	6	5	4	3	2	1	0
Name	PxPU7	PxPU6	PxPU5	PxPU4	PxPU3	PxPU2	PxPU1	PxPU0
R/W	R/W	R/W	R/W	R/W	R/W	R/W	R/W	R/W
POR	0	0	0	0	0	0	0	0

PxPUn: I/O Port x Pin pull-high function control
0: Disable
1: Enable

The PxPUn bit is used to control the pin pull-high function. Here the "x" can be A, B or C. However, the actual available bits for each I/O Port may be different.

Port A Wake-up

The HALT instruction forces the microcontroller into the SLEEP or IDLE Mode which preserves power, a feature that is important for battery and other low-power applications. Various methods exist to wake-up the microcontroller, one of which is to change the logic condition on one of the Port A pins from high to low. This function is especially suitable for applications that can be woken up via external switches. Each pin on Port A can be selected individually to have this wake-up feature using the PAWU register.

- **PAWU Register**

Bit	7	6	5	4	3	2	1	0
Name	PAWU7	—	—	PAWU4	PAWU3	PAWU2	PAWU1	PAWU0
R/W	R/W	—	—	R/W	R/W	R/W	R/W	R/W
POR	0	—	—	0	0	0	0	0

Bit 7 **PAWU7**: PA7 wake-up function control
0: Disable
1: Enable

Bit 6~5 Unimplemented, read as "0"

Bit 4~0 **PAWU4~PAWU0**: PA4~PA0 wake-up function control
0: Disable
1: Enable

I/O Port Control Registers

Each Port has its own control register, known as PAC~PCC, which controls the input/output configuration. With this control register, each CMOS output or input can be reconfigured dynamically under software control. Each pin of the I/O ports is directly mapped to a bit in its associated port control register. For the I/O pin to function as an input, the corresponding bit of the control register must be written as a "1". This will then allow the logic state of the input pin to be directly read by instructions. When the corresponding bit of the control register is written as a "0", the I/O pin will be setup as a CMOS output. If the pin is currently setup as an output, instructions can still be used to read the output register.

However, it should be noted that the program will in fact only read the status of the output data latch and not the actual logic status of the output pin.

- **PxC Register**

Bit	7	6	5	4	3	2	1	0
Name	PxC7	PxC5	PxC5	PxC4	PxC3	PxC2	PxC1	PxC0
R/W	R/W	R/W	R/W	R/W	R/W	R/W	R/W	R/W
POR	1	1	1	1	1	1	1	1

PxCn: I/O Port x Pin type selection
0: Output
1: Input

The PxCn bit is used to control the pin type selection. Here the "x" can be A, B or C. However, the actual available bits for each I/O Port may be different.

Pin-remapping Function

The flexibility of the microcontroller range is greatly enhanced by the use of pins that have more than one function. Limited numbers of pins can force serious design constraints on designers but by supplying pins with multi-functions, many of these difficulties can be overcome. The way in which the pin function of each pin is selected is different for each function and a priority order is established where more than one pin function is selected simultaneously. Additionally there is one register, PXRM, to establish certain pin functions.

If the pin-shared pin function have multiple outputs simultaneously, its pin names at the right side of the "/" sign can be used for higher priority.

- **PXRM Register**

Bit	7	6	5	4	3	2	1	0
Name	TMPC1	TMPC0	—	—	—	—	PXRM1	PXRM0
R/W	R/W	R/W	—	—	—	—	R/W	R/W
POR	0	0	—	—	—	—	0	0

Bit 7 **TMPC1**: PTPB pin control
0: Disable
1: Enable

Bit 6 **TMPC0**: PTP pin control
0: Disable
1: Enable

Bit 5~2 Unimplemented, read as “0”

Bit 1 **PXRM1**: SIM module SCK/SCLpin-remapping selection
0: PA2
1: PA7

Bit 0 **PXRM0**: SIM module SDI/SDA pin-remapping selection
0: PA0
1: PA4

I/O Pin Structures

The accompanying diagram illustrates the internal stuctures of the I/O logic function. As the exact logical construction of the I/O pin will differ from this drawing, it is supplied as a guide only to assist with the functional understanding of the logic function I/O pins. The wide range of pin-shared structures does not permit all types to be shown.

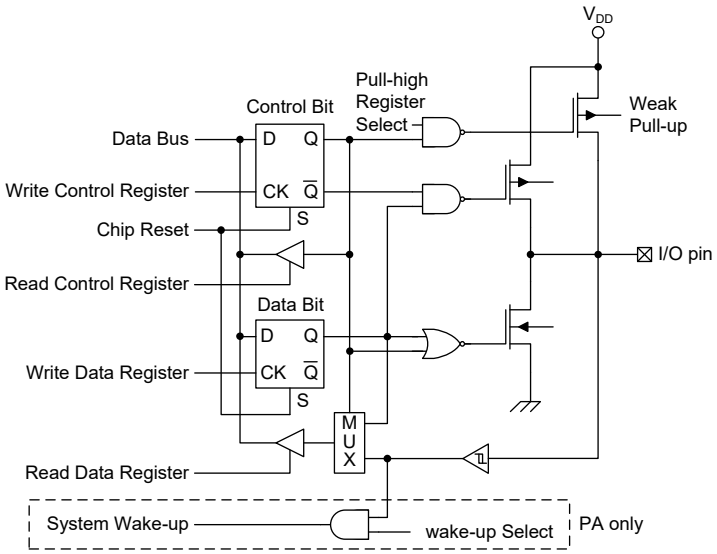

Logic Function Input/Output Structure

Programming Considerations

Within the user program, one of the first things to consider is port initialisation. After a reset, all of the I/O data and port control registers will be set high. This means that all I/O pins will default to an input state, the level of which depends on the other connected circuitry and whether pull-high selections have been chosen. If the port control registers are then programmed to setup some pins as outputs, these output pins will have an initial high output value unless the associated port data registers are first programmed. Selecting which pins are inputs and which are outputs can be achieved byte-wide by loading the correct values into the appropriate port control register or by programming individual bits in the port control register using the "SET [m].i" and "CLR [m].i" instructions. Note that when using these bit control instructions, a read-modify-write operation takes place. The microcontroller must first read in the data on the entire port, modify it to the required new bit values and then rewrite this data back to the output ports.

Port A has the additional capability of providing wake-up functions. When the device is in the SLEEP or IDLE Mode, various methods are available to wake the device up. One of these is a high to low transition of any of the Port A pins. Single or multiple pins on Port A can be setup to have this function.

Timer Modules – TM

One of the most fundamental functions in any microcontroller device is the ability to control and measure time. To implement time related functions the device includes single Timer Module, abbreviated to the name TM. The TM is multi-purpose timing unit and serve to provide operations such as Timer/Counter, Input Capture, Compare Match Output and Single Pulse Output as well as being the functional unit for the generation of PWM signals. The TM has two individual interrupts. The addition of input and output pins for TM ensures that users are provided with timing units with a wide and flexible range of features.

Introduction

These devices contain only one Periodic Type TM unit, with its individual reference name, PTM. The main features of PTM are summarised in the accompanying table.

Function	PTM
Timer/Counter	√
Input Capture	√
Compare Match Output	√
PWM Output	√
Single Pulse Output	√
PWM Alignment	Edge
PWM Adjustment Period & Duty	Duty or Period

TM Function Summary

TM Operation

The Periodic type TM offers a diverse range of functions, from simple timing operations to PWM signal generation. The key to understanding how the TM operates is to see it in terms of a free running counter whose value is then compared with the value of pre-programmed internal comparators. When the free running counter has the same value as the pre-programmed comparator, known as a compare match situation, a TM interrupt signal will be generated which can clear the counter and perhaps also change the condition of the TM output pin. The internal TM counter is driven by a user selectable clock source, which can be an internal clock or an external pin.

TM Clock Source

The clock source which drives the main counter in each TM can originate from various sources. The selection of the required clock source is implemented using the PTCK2~PTCK0 bits in the PTM control registers. The clock source can be a ratio of the system clock f_{SYS} or the internal high clock f_H, the f_{SUB} clock source or the external PTCK pin. The PTCK pin clock source is used to allow an external signal to drive the TM as an external clock source or for event counting.

TM Interrupts

The Periodic type TM has two internal interrupts, the internal comparator A or comparator P, which generate a TM interrupt when a compare match condition occurs. When a TM interrupt is generated, it can be used to clear the counter and also to change the state of the TM output pin.

TM External Pins

The Periodic type TM has two TM input pin, with the label PTCK and PTPI. The PTM input pin, PTCK, is essentially a clock source for the PTM and is selected using the PTCK2~PTCK0 bits in the PTMC0 register. This external TM input pin allows an external clock source to drive the internal TM. The TM input pin can be chosen to have either a rising or falling active edge. The PTCK pin is also used as the external trigger input pin in single pulse output mode.

The other PTM input pin, PTPI, is the capture input whose active edge can be a rising edge, a falling edge or both rising and falling edges and the active edge transition type is selected using the PTIO1~PTIO0 bits in the PTMC1 register.

The Periodic type TM has two output pins with the label PTP and PTPB. The PTPB pin outputs the inverted signal of the PTP. When the TM is in the Compare Match Output Mode, these pins can be controlled by the TM to switch to a high or low level or to toggle when a compare match situation occurs. The external PTP and PTPB output pins are also the pins where the TM generates the PWM output waveform. As the TM output pins are pin-shared with other function, the TM output function must first be setup using the associated register. A single bit in the register determines if its associated pin is to be used as an external TM output pin or if it is to have another function.

PTM	
Input	**Output**
PTCK, PTPI	PTP, PTPB

TM External Pins

TM Input/Output Pin Selection

Selecting to have a TM input/output or whether to retain its other shared function is implemented using one register, with a single bit in the register corresponding to a TM input/output pin. Configuring the selection bits correctly will setup the corresponding pin as a TM input/output. Setting the bit high will setup the corresponding pin as a TM input/output, if reset to zero the pin will retain its original other function.

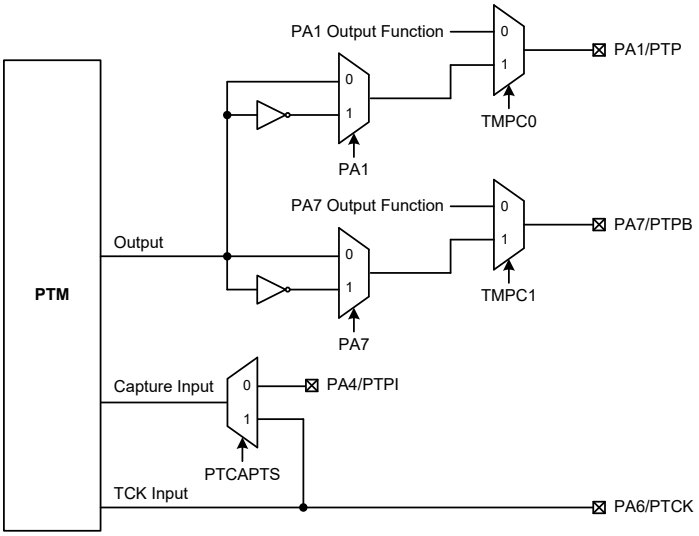

PTM Function Pin Control Block Diagram

Programming Considerations

The TM Counter Registers and the Capture/Compare CCRA and CCRP registers, being 10-bit, all have a low and high byte structure. The high bytes can be directly accessed, but as the low bytes can only be accessed via an internal 8-bit buffer, reading or writing to these register pairs must be carried out in a specific way. The important point to note is that data transfer to and from the 8-bit buffer and its related low byte only takes place when a write or read operation to its corresponding high byte is executed.

As the CCRA and CCRP registers are implemented in the way shown in the following diagram and accessing this register pair is carried out in a specific way described above, it is recommended to use the "MOV" instruction to access the CCRA and CCRP low byte register, named PTMAL and PTMRPL, in the following access procedures. Accessing the CCRA or CCRP low byte register without following these access procedures will result in unpredictable values.

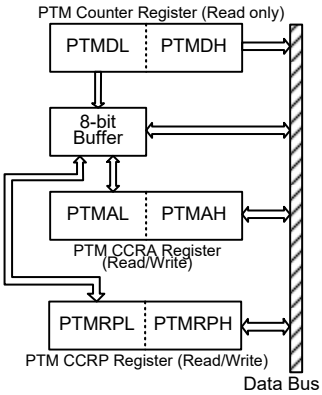

The following steps show the read and write procedures:

- Writing Data to CCRA or CCRP
  - Step 1. Write data to Low Byte PTMAL or PTMRPL
    - Note that here data is only written to the 8-bit buffer.
  - Step 2. Write data to High Byte PTMAH or PTMRPH
    - Here data is written directly to the high byte registers and simultaneously data is latched from the 8-bit buffer to the Low Byte registers.
- Reading Data from the Counter Registers and CCPR or CCRA
  - Step 1. Read data from the High Byte PTMDH, PTMAH or PTMRPH
    - Here data is read directly from the High Byte registers and simultaneously data is latched from the Low Byte register into the 8-bit buffer.
  - Step 2. Read data from the Low Byte PTMDL, PTMAL or PTMRPL
    - This step reads data from the 8-bit buffer.

Periodic Type TM – PTM

The Periodic Type TM contains five operating modes, which are Compare Match Output, Timer/Event Counter, Capture Input, Single Pulse Output and PWM Output modes. The Periodic TM can be controlled with two external input pins and can drive two external output pins.

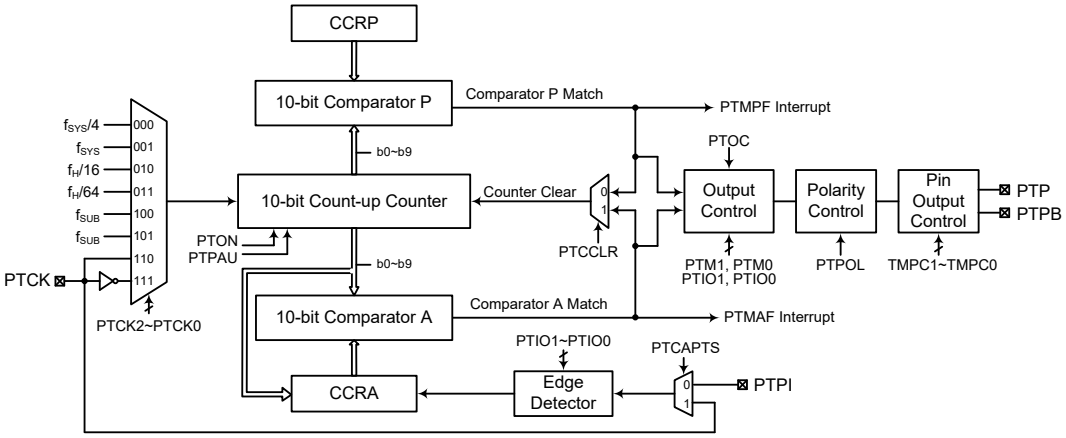

Note: PTPB is the inverted output of PTP.

Periodic Type TM Block Diagram

Periodic TM Operation

The Periodic Type TM core is a 10-bit count-up counter which is driven by a user selectable internal or external clock source. There are also two internal comparators with the names, Comparator A and Comparator P. These comparators will compare the value in the counter with CCRP and CCRA registers. The CCRP and CCRA comparators are 10-bit wide.

The only way of changing the value of the 10-bit counter using the application program, is to clear the counter by changing the PTON bit from low to high. The counter will also be cleared automatically by a counter overflow or a compare match with one of its associated comparators. When these conditions occur, a PTM interrupt signal will also usually be generated. The Periodic Type TM can operate in a number of different operational modes, can be driven by different clock sources including an input pin and can also control more than one output pin. All operating setup conditions are selected using relevant internal registers.

Periodic Type TM Register Description

Overall operation of the Periodic Type TM is controlled using a series of registers. A read only register pair exists to store the internal counter 10-bit value, while two read/write register pairs exist to store the internal 10-bit CCRA value and CCRP value. The remaining two registers are control registers which setup the different operating and control modes.

Register Name	Bit							
	7	6	5	4	3	2	1	0
PTMC0	PTPAU	PTCK2	PTCK1	PTCK0	PTON	—	—	—
PTMC1	PTM1	PTM0	PTIO1	PTIO0	PTOC	PTPOL	PTCAPTS	PTCCLR
PTMDL	D7	D6	D5	D4	D3	D2	D1	D0
PTMDH	—	—	—	—	—	—	D9	D8
PTMAL	D7	D6	D5	D4	D3	D2	D1	D0
PTMAH	—	—	—	—	—	—	D9	D8
PTMRPL	D7	D6	D5	D4	D3	D2	D1	D0
PTMRPH	—	—	—	—	—	—	D9	D8

10-bit Periodic TM Register List

• **PTMC0 Register**

Bit	7	6	5	4	3	2	1	0
Name	PTPAU	PTCK2	PTCK1	PTCK0	PTON	—	—	—
R/W	R/W	R/W	R/W	R/W	R/W	—	—	—
POR	0	0	0	0	0	—	—	—

Bit 7 **PTPAU**: PTM Counter Pause Control
0: Run
1: Pause

The counter can be paused by setting this bit high. Clearing the bit to zero restores normal counter operation. When in a Pause condition the PTM will remain powered up and continue to consume power. The counter will retain its residual value when this bit changes from low to high and resume counting from this value when the bit changes to a low value again.

Bit 6~4 **PTCK2~PTCK0**: Select PTM Counter clock
000: $f_{SYS}/4$
001: f_{SYS}
010: $f_H/16$
011: $f_H/64$
100: f_{SUB}
101: f_{SUB}
110: PTCK rising edge clock
111: PTCK falling edge clock

These three bits are used to select the clock source for the PTM. The external pin clock source can be chosen to be active on the rising or falling edge. The clock source f_{SYS} is the system clock, while f_H and f_{SUB} are other internal clocks, the details of which can be found in the oscillator section.

Bit 3 **PTON**: PTM Counter On/Off Control
0: Off
1: On

This bit controls the overall on/off function of the PTM. Setting the bit high enables the counter to run, clearing the bit disables the PTM. Clearing this bit to zero will stop the counter from counting and turn off the PTM which will reduce its power consumption. When the bit changes state from low to high the internal counter value will be reset to zero, however when the bit changes from high to low, the internal counter will retain its residual value until the bit returns high again.

If the PTM is in the Compare Match Output Mode, PWM output Mode or Single Pulse Output Mode then the PTM output pin will be reset to its initial condition, as specified by the PTOC bit, when the PTON bit changes from low to high.

Bit 2~0 Unimplemented, read as “0”

• **PTMC1 Register**

Bit	7	6	5	4	3	2	1	0
Name	PTM1	PTM0	PTIO1	PTIO0	PTOC	PTPOL	PTCAPTS	PTCCLR
R/W	R/W	R/W	R/W	R/W	R/W	R/W	R/W	R/W
POR	0	0	0	0	0	0	0	0

Bit 7~6 **PTM1~PTM0**: Select PTM Operating Mode
00: Compare Match Output Mode
01: Capture Input Mode
10: PWM Output Mode or Single Pulse Output Mode
11: Timer/Counter Mode

These bits setup the required operating mode for the PTM. To ensure reliable operation the PTM should be switched off before any changes are made to the PTM1 and PTM0 bits. In the Timer/Counter Mode, the PTM output pin state is undefined.

Bit 5~4 **PTIO1~PTIO0**: Select PTM external pin function

Compare Match Output Mode
00: No change
01: Output low
10: Output high
11: Toggle output

PWM Output Mode/Single Pulse Output Mode
00: PWM Output inactive state
01: PWM Output active state
10: PWM output
11: Single pulse output

Capture Input Mode
00: Input capture at rising edge of PTPI or PTCK
01: Input capture at falling edge of PTPI or PTCK
10: Input capture at falling/rising edge of PTPI or PTCK
11: Input capture disabled

Timer/Counter Mode
Unused

These two bits are used to determine how the PTM external pin changes state when a certain condition is reached. The function that these bits select depends upon in which mode the PTM is running.

In the Compare Match Output Mode, the PTIO1 and PTIO0 bits determine how the PTM output pin changes state when a compare match occurs from the Comparator A. The PTM output pin can be setup to switch high, switch low or to toggle its present state when a compare match occurs from the Comparator A. When the bits are both zero, then no change will take place on the output. The initial value of the PTM output pin should be setup using the PTOC bit in the PTMC1 register. Note that the output level requested by the PTIO1 and PTIO0 bits must be different from the initial value setup using the PTOC bit otherwise no change will occur on the PTM output pin when a compare match occurs. After the PTM output pin changes state, it can be reset to its initial level by changing the level of the PTON bit from low to high.

In the PWM Output Mode, the PTIO1 and PTIO0 bits determine how the PTM output pin changes state when a certain compare match condition occurs. The PWM output function is modified by changing these two bits. It is necessary to only change the values of the PTIO1 and PTIO0 bits only after the TM has been switched off. Unpredictable PWM outputs will occur if the PTIO1 and PTIO0 bits are changed when the PTM is running.

Bit 3 **PTOC**: PTM PTP Output control bit

Compare Match Output Mode
0: Initial low
1: Initial high

PWM Output Mode/Single Pulse Output Mode
0: Active low
1: Active high

This is the output control bit for the PTM output pin. Its operation depends upon whether PTM is being used in the Compare Match Output Mode or in the PWM Output Mode/Single Pulse Output Mode. It has no effect if the PTM is in the Timer/Counter Mode. In the Compare Match Output Mode it determines the logic level of the PTM output pin before a compare match occurs. In the PWM Output Mode it determines if the PWM signal is active high or active low. In the Single Pulse Output Mode it determines the logic level of the PTM output pin when the PTON bit changes from low to high.

Bit 2 **PTPOL**: PTM PTP Output polarity Control
0: Non-invert
1: Invert

This bit controls the polarity of the PTP output pin. When the bit is set high the PTM output pin will be inverted and not inverted when the bit is zero. It has no effect if the PTM is in the Timer/Counter Mode.

Bit 1 **PTCAPTS**: PTM Capture Trigger Source Selection
0: From PTPI pin
1: From PTCK pin

Bit 0 **PTCCLR**: Select PTM Counter clear condition
0: PTM Comparator P match
1: PTM Comparator A match

This bit is used to select the method which clears the counter. Remember that the Periodic TM contains two comparators, Comparator A and Comparator P, either of which can be selected to clear the internal counter. With the PTCCLR bit set high, the counter will be cleared when a compare match occurs from the Comparator A. When the bit is low, the counter will be cleared when a compare match occurs from the Comparator P or with a counter overflow. A counter overflow clearing method can only be implemented if the CCRP bits are all cleared to zero. The PTCCLR bit is not used in the PWM Output Mode, Single Pulse Output Mode or Capture Input Mode.

- **PTMDL Register**

Bit	7	6	5	4	3	2	1	0
Name	D7	D6	D5	D4	D3	D2	D1	D0
R/W	R	R	R	R	R	R	R	R
POR	0	0	0	0	0	0	0	0

Bit 7~0 **D7~D0**: PTM Counter Low Byte Register bit 7 ~ bit 0
PTM 10-bit Counter bit 7 ~ bit 0

- **PTMDH Register**

Bit	7	6	5	4	3	2	1	0
Name	—	—	—	—	—	—	D9	D8
R/W	—	—	—	—	—	—	R	R
POR	—	—	—	—	—	—	0	0

Bit 7~2 Unimplemented, read as “0”

Bit 1~0 **D9~D8**: PTM Counter High Byte Register bit 1 ~ bit 0
PTM 10-bit Counter bit 9 ~ bit 8

- **PTMAL Register**

Bit	7	6	5	4	3	2	1	0
Name	D7	D6	D5	D4	D3	D2	D1	D0
R/W	R/W	R/W	R/W	R/W	R/W	R/W	R/W	R/W
POR	0	0	0	0	0	0	0	0

Bit 7~0 **D7~D0**: PTM CCRA Low Byte Register bit 7 ~ bit 0
PTM 10-bit CCRA bit 7 ~ bit 0

- **PTMAH Register**

Bit	7	6	5	4	3	2	1	0
Name	—	—	—	—	—	—	D9	D8
R/W	—	—	—	—	—	—	R/W	R/W
POR	—	—	—	—	—	—	0	0

Bit 7~2 Unimplemented, read as “0”

Bit 1~0 **D9~D8**: PTM CCRA High Byte Register bit 1 ~ bit 0
PTM 10-bit CCRA bit 9 ~ bit 8

• **PTMRPL Register**

Bit	7	6	5	4	3	2	1	0
Name	D7	D6	D5	D4	D3	D2	D1	D0
R/W	R/W	R/W	R/W	R/W	R/W	R/W	R/W	R/W
POR	0	0	0	0	0	0	0	0

Bit 7~0 **D7~D0**: PTM CCRP Low Byte Register bit 7 ~ bit 0
PTM 10-bit CCRP bit 7 ~ bit 0

• **PTMRPH Register**

Bit	7	6	5	4	3	2	1	0
Name	—	—	—	—	—	—	D9	D8
R/W	—	—	—	—	—	—	R/W	R/W
POR	—	—	—	—	—	—	0	0

Bit 7~2 Unimplemented, read as "0"

Bit 1~0 **D9~D8**: PTM CCRP High Byte Register bit 1 ~ bit 0
PTM 10-bit CCRP bit 9 ~ bit 8

Periodic Type TM Operating Modes

The Periodic Type TM can operate in one of five operating modes, Compare Match Output Mode, PWM Output Mode, Single Pulse Output Mode, Capture Input Mode or Timer/Counter Mode. The operating mode is selected using the PTM1 and PTM0 bits in the PTMC1 register.

Compare Match Output Mode

To select this mode, bits PTM1 and PTM0 in the PTMC1 register, should be set to 00 respectively. In this mode once the counter is enabled and running it can be cleared by three methods. These are a counter overflow, a compare match from Comparator A and a compare match from Comparator P. When the PTCCLR bit is low, there are two ways in which the counter can be cleared. One is when a compare match from Comparator P, the other is when the CCRP bits are all zero which allows the counter to overflow. Here both PTMAF and PTMPF interrupt request flags for Comparator A and Comparator P respectively, will both be generated.

If the PTCCLR bit in the PTMC1 register is high then the counter will be cleared when a compare match occurs from Comparator A. However, here only the PTMAF interrupt request flag will be generated even if the value of the CCRP bits is less than that of the CCRA registers. Therefore when PTCCLR is high no PTMPF interrupt request flag will be generated. In the Compare Match Output Mode, the CCRA can not be cleared to zero.

If the CCRA bits are all zero, the counter will overflow when its reaches its maximum 10-bit, 3FF Hex, value, however here the PTMAF interrupt request flag will not be generated.

As the name of the mode suggests, after a comparison is made, the PTM output pin, will change state. The PTM output pin condition however only changes state when a PTMAF interrupt request flag is generated after a compare match occurs from Comparator A. The PTMPF interrupt request flag, generated from a compare match occurs from Comparator P, will have no effect on the PTM output pin. The way in which the PTM output pin changes state are determined by the condition of the PTIO1 and PTIO0 bits in the PTMC1 register. The PTM output pin can be selected using the PTIO1 and PTIO0 bits to go high, to go low or to toggle from its present condition when a compare match occurs from Comparator A. The initial condition of the PTM output pin, which is setup after the PTON bit changes from low to high, is setup using the PTOC bit. Note that if the PTIO1 and PTIO0 bits are zero then no pin change will take place.

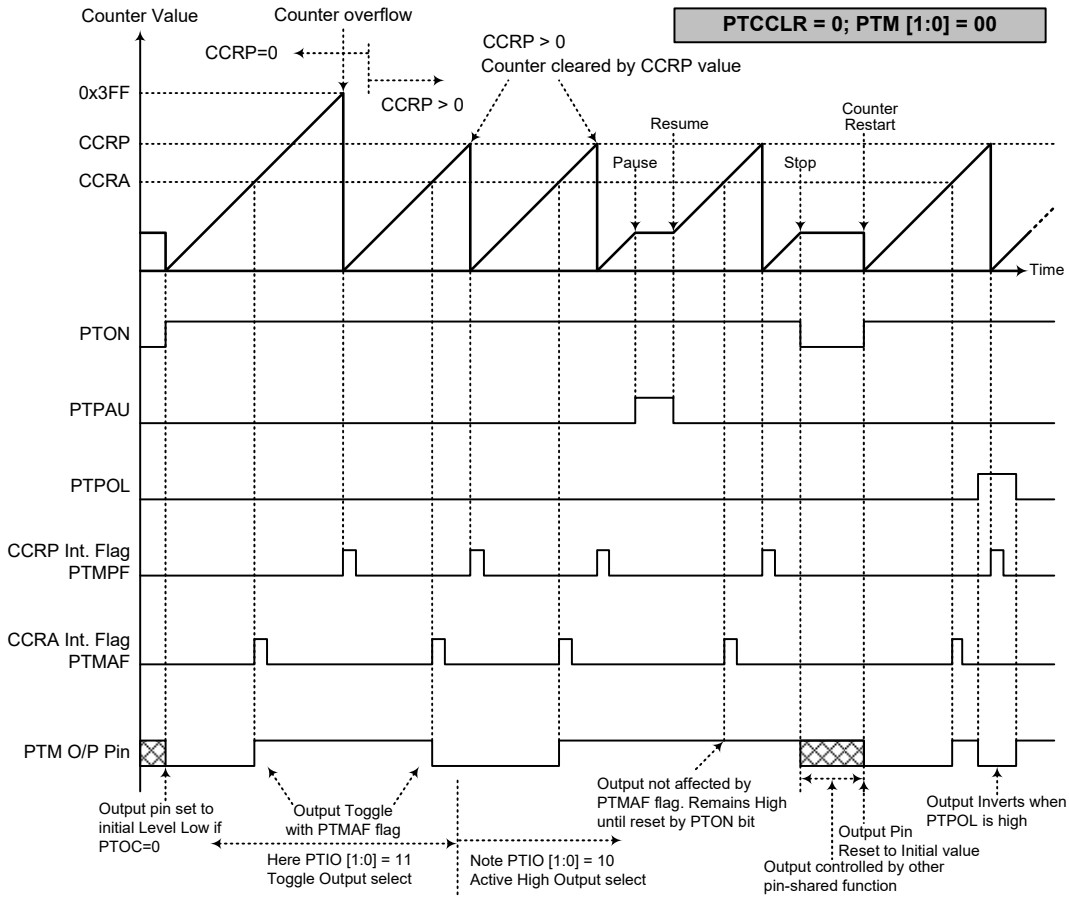

Compare Match Output Mode – PTCCLR=0

Note: 1. With PTCCLR=0 a Comparator P match will clear the counter
2. The PTM output pin is controlled only by the PTMAF flag
3. The output pin is reset to its initial state by a PTON bit rising edge

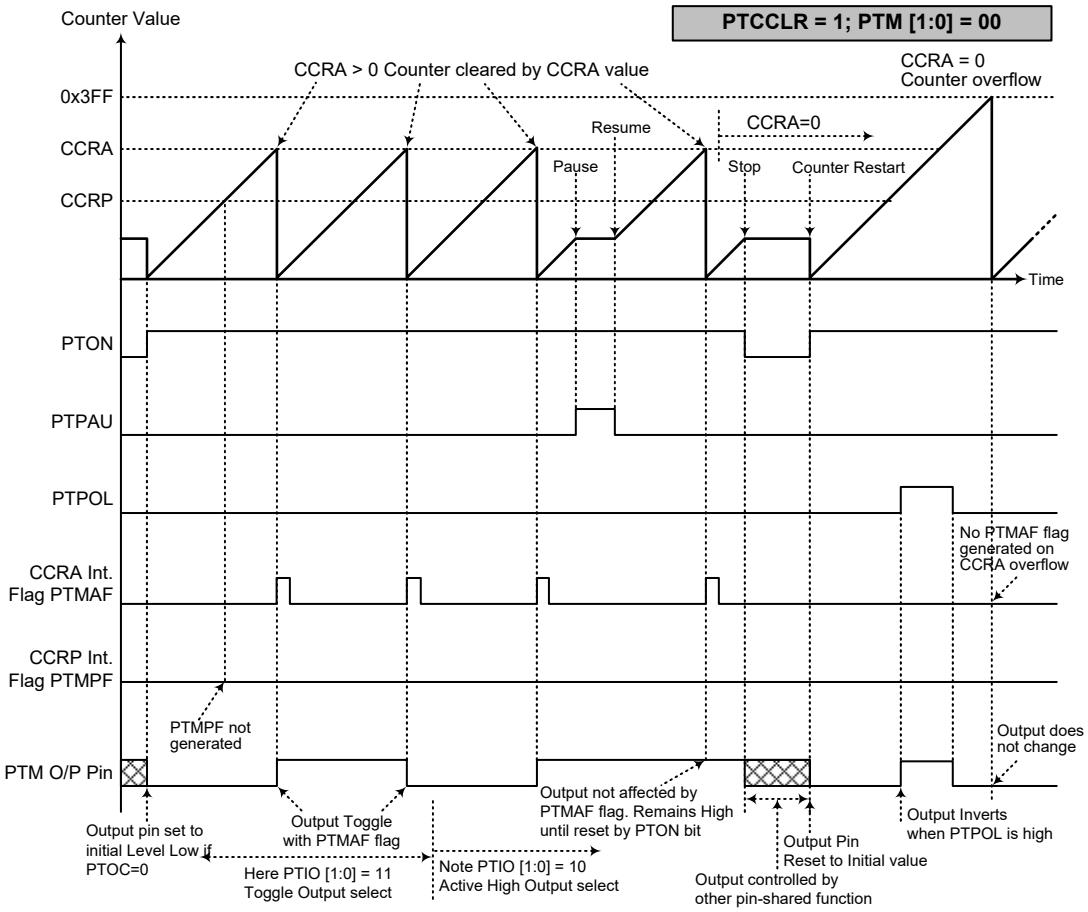

Compare Match Output Mode – PTCCLR=1

Note: 1. With PTCCLR=1 a Comparator A match will clear the counter
2. The PTM output pin is controlled only by the PTMAF flag
3. The output pin is reset to its initial state by a PTON bit rising edge
4. A PTMPF flag is not generated when PTCCLR=1

Timer/Counter Mode

To select this mode, bits PTM1 and PTM0 in the PTMC1 register should be set to 11 respectively. The Timer/Counter Mode operates in an identical way to the Compare Match Output Mode generating the same interrupt flags. The exception is that in the Timer/Counter Mode the PTM output pin is not used. Therefore the above description and Timing Diagrams for the Compare Match Output Mode can be used to understand its function. Therefore the above description and Timing Diagrams for the Compare Match Output Mode can be used to understand its function. As the PTM output pin is not used in this mode, the pin can be used as a normal I/O pin or other pin-shared function.

PWM Output Mode

To select this mode, bits PTM1 and PTM0 in the PTMC1 register should be set to 10 respectively. The PWM function within the PTM is useful for applications which require functions such as motor control, heating control, illumination control etc. By providing a signal of fixed frequency but of varying duty cycle on the PTM output pin, a square wave AC waveform can be generated with varying equivalent DC RMS values.

As both the period and duty cycle of the PWM waveform can be controlled, the choice of generated waveform is extremely flexible. In the PWM Output Mode, the PTCCLR bit has no effect on the PWM operation. Both of the CCRA and CCRP registers are used to generate the PWM waveform, one register is used to clear the internal counter and thus control the PWM waveform frequency, while the other one is used to control the duty cycle. The PWM waveform frequency and duty cycle can therefore be controlled by the values in the CCRA and CCRP registers.

An interrupt flag, one for each of the CCRA and CCRP, will be generated when a compare match occurs from either Comparator A or Comparator P. The PTOC bit in the PTMC1 register is used to select the required polarity of the PWM waveform while the two PTIO1 and PTIO0 bits are used to enable the PWM output or to force the PTM output pin to a fixed high or low level. The PTPOL bit is used to reverse the polarity of the PWM output waveform.

- **10-bit PTM, PWM Output Mode, Edge-aligned Mode**

CCRP	1~1023	0
Period	1~1023	1024
Duty	CCRA	

If f_{SYS}=16MHz, PTM clock source select $f_{SYS}/4$, CCRP=512 and CCRA=128,

The PTM PWM output frequency=($f_{SYS}/4$)/512=f_{SYS}/2048=7.8125kHz, duty=128/512=25%.

If the Duty value defined by the CCRA register is equal to or greater than the Period value, then the PWM output duty is 100%.

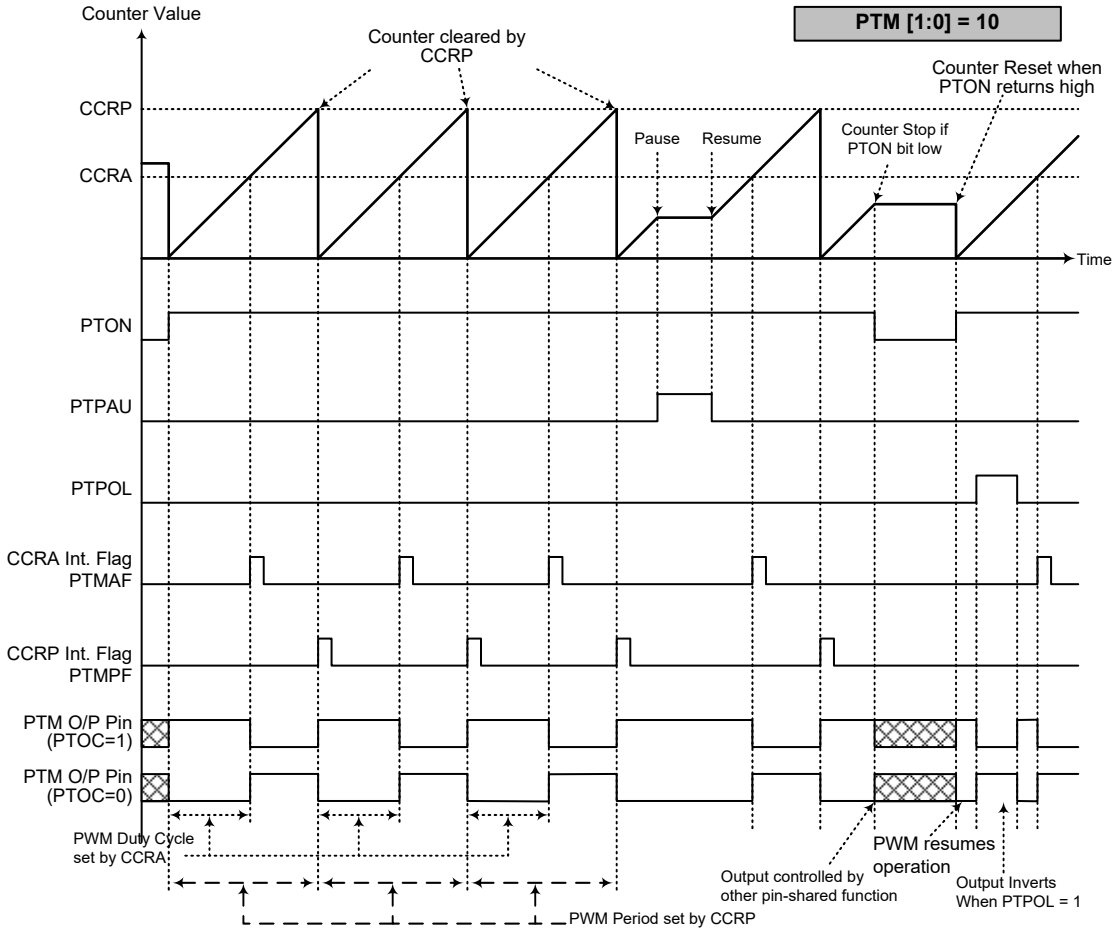

PWM Output Mode

Note: 1. Counter cleared by CCRP
2. A counter clear sets the PWM Period
3. The internal PWM function continues running even when PTIO[1:0]=00 or 01
4. The PTCCLR bit has no influence on PWM operation

Single Pulse Output Mode

To select this mode, bits PTM1 and PTM0 in the PTMC1 register should be set to 10 respectively and also the PTIO1 and PTIO0 bits should be set to 11 respectively. The Single Pulse Output Mode, as the name suggests, will generate a single shot pulse on the PTM output pin.

The trigger for the pulse output leading edge is a low to high transition of the PTON bit, which can be implemented using the application program. However in the Single Pulse Output Mode, the PTON bit can also be made to automatically change from low to high using the external PTCK pin, which will in turn initiate the Single Pulse output. When the PTON bit transitions to a high level, the counter will start running and the pulse leading edge will be generated. The PTON bit should remain high when the pulse is in its active state. The generated pulse trailing edge will be generated when the PTON bit is cleared to zero, which can be implemented using the application program or when a compare match occurs from Comparator A.

However a compare match from Comparator A will also automatically clear the PTON bit and thus generate the Single Pulse output trailing edge. In this way the CCRA value can be used to control the pulse width. A compare match from Comparator A will also generate a PTM interrupt. The counter can only be reset back to zero when the PTON bit changes from low to high when the counter restarts. In the Single Pulse Output Mode CCRP is not used. The PTCCLR bit is not used in this Mode.

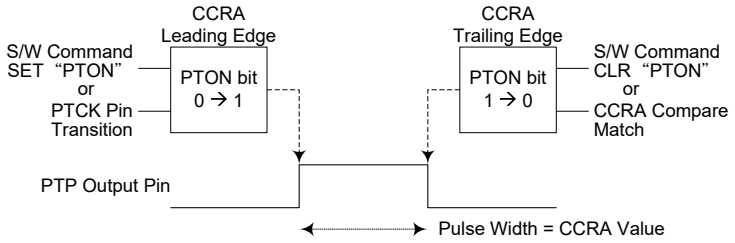

Single Pulse Generation

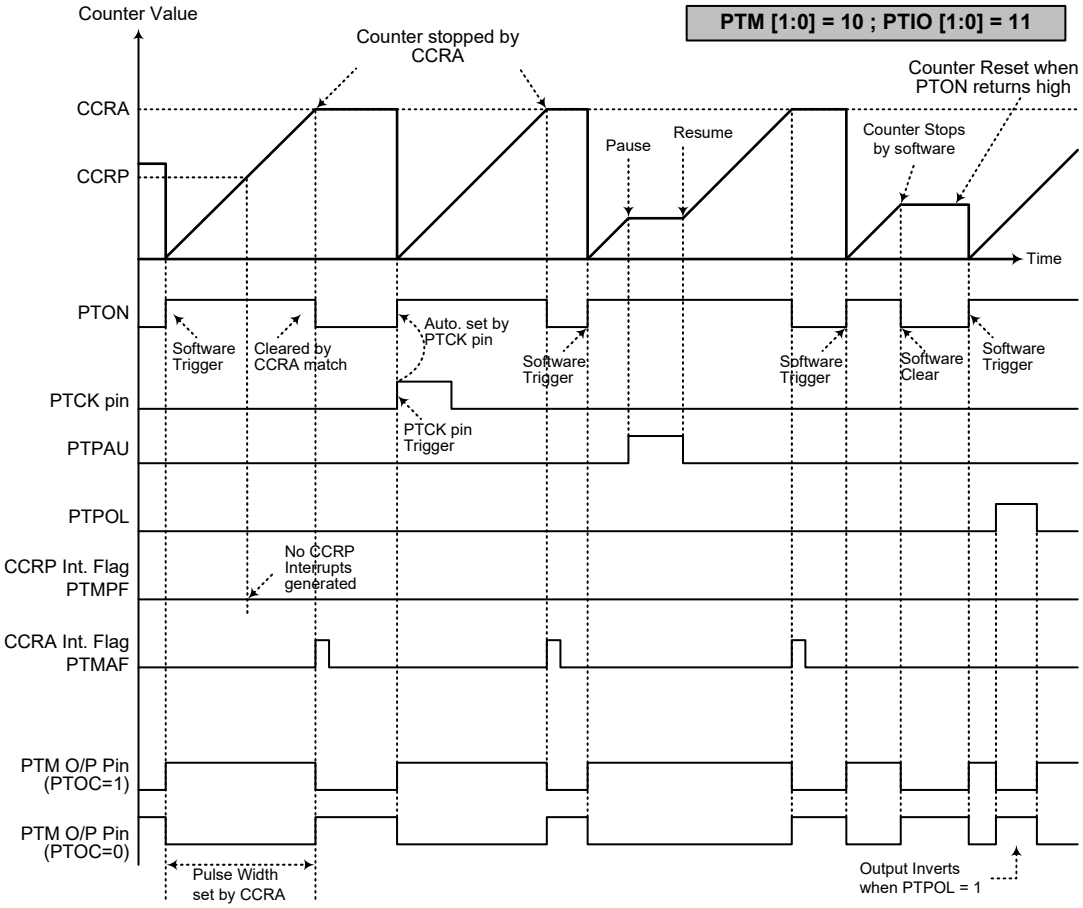

Single Pulse Output Mode

Note: 1. Counter stopped by CCRA
2. CCRP is not used
3. The pulse is triggered by the PTCK pin or by setting the PTON bit high
4. A PTCK pin active edge will automatically set the PTON bit high
5. In the Single Pulse Output Mode, PTIO[1:0] must be set to “11” and cannot be changed

Capture Input Mode

To select this mode bits PTM1 and PTM0 in the PTMC1 register should be set to 01 respectively. This mode enables external signals to capture and store the present value of the internal counter and can therefore be used for applications such as pulse width measurements. The external signal is supplied on the PTPI or PTCK pin which is selected using the PTCAPTS bit in the PTMC1 register. The input pin active edge can be either a rising edge, a falling edge or both rising and falling edges; the active edge transition type is selected using the PTIO1 and PTIO0 bits in the PTMC1 register. The counter is started when the PTON bit changes from low to high which is initiated using the application program.

When the required edge transition appears on the PTPI or PTCK pin the present value in the counter will be latched into the CCRA registers and a PTM interrupt generated. Irrespective of what events occur on the PTPI or PTCK pin, the counter will continue to free run until the PTON bit changes from high to low. When a CCRP compare match occurs the counter will reset back to zero; in this way the CCRP value can be used to control the maximum counter value. When a CCRP compare match occurs from Comparator P, a PTM interrupt will also be generated. Counting the number of overflow interrupt signals from the CCRP can be a useful method in measuring long pulse widths. The PTIO1 and PTIO0 bits can select the active trigger edge on the PTPI or PTCK pin to be a rising edge, falling edge or both edge types. If the PTIO1 and PTIO0 bits are both set high, then no capture operation will take place irrespective of what happens on the PTPI or PTCK pin, however it must be noted that the counter will continue to run.

As the PTPI or PTCK pin is pin shared with other functions, care must be taken if the PTM is in the Capture Input Mode. This is because if the pin is setup as an output, then any transitions on this pin may cause an input capture operation to be executed. The PTCCLR, PTOC and PTPOL bits are not used in this Mode.

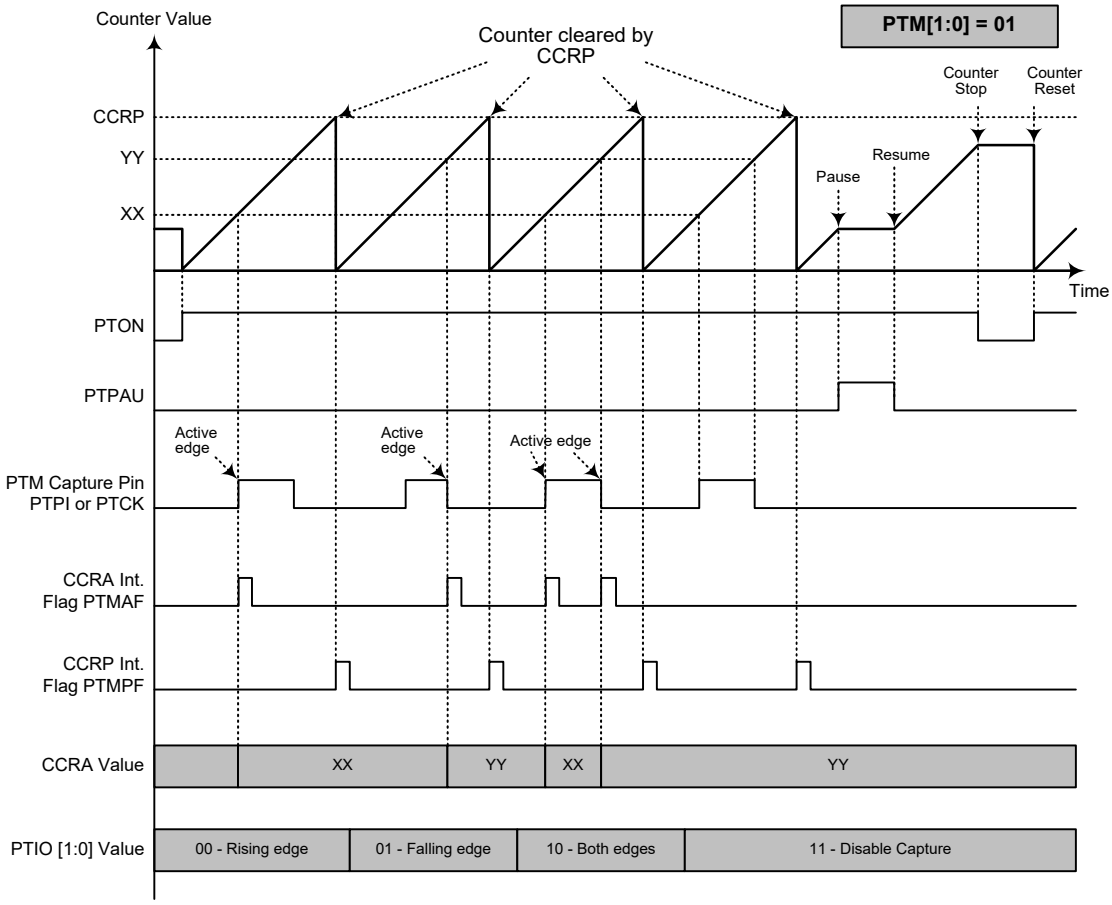

Capture Input Mode

Note: 1. PTM[1:0]=01 and active edge set by the PTIO[1:0] bits
2. A PTM Capture input pin active edge transfers the counter value to CCRA
3. PTCCLR bit not used
4. No output function – PTOC and PTPOL bits are not used
5. CCRP determines the counter value and the counter has a maximum count value when CCRP is equal to zero

Touch Key Function

Each device provides multiple Touch Key functions. The Touch Key function is fully integrated and requires no external components, allowing Touch Key functions to be implemented by the simple manipulation of internal registers.

Touch Key Structure

The Touch Keys are pin shared with the PB~PC logic I/O pins, with the desired function chosen via register bits. Keys are organised into several groups, with each group known as a module and having a module number, M0 to Mn. Each module is a fully independent set of four Touch Keys and each Touch Key has its own oscillator. Each module contains its own control logic circuits and register set. Examination of the register names will reveal the module number it is referring to.

Device	Keys	Touch Key Module	Touch Key	Shared I/O Pin
BS83B08C	8	M0	Key1~Key4	PB0~PB3
		M1	Key5~Key8	PB4~PB7
BS83B12C	12	M0	Key1~Key4	PB0~PB3
		M1	Key5~Key8	PB4~PB7
		M2	Key9~Key12	PC0~PC3
BS83B16C	16	M0	Key1~Key4	PB0~PB3
		M1	Key5~Key8	PB4~PB7
		M2	Key9~Key12	PC0~PC3
		M3	Key13~Key16	PC4~PC7

Touch Key Structure

Touch Key Register Definition

Each Touch Key module, which contains four Touch Key functions, has its own suite registers. The following table shows the register set for each Touch Key module. The Mn within the register name refers to the Touch Key module numbers,the BS83B08C has a range of M0 to M1, the BS83B12C has a range of M0 to M2, theBS83B16C has a range of M0 to M3.

Register Name	Usage
TKTMR	Touch key time slot 8-bit counter preload register
TKC0	Touch key function control register 0
TKC1	Touch key function control register 1
TK16DL	Touch key 16-bit counter low byte
TK16DH	Touch key 16-bit counter high byte
TKMn16DL	Touch key module n 16-bit counter C/F low byte
TKMn16DH	Touch key module n 16-bit counter C/F high byte
TKMnROL	Touch key module n reference oscillator capacitor select low byte
TKMnROH	Touch key module n reference oscillator capacitor select high byte
TKMnC0	Touch key module n control register 0
TKMnC1	Touch key module n control register 1

Touch Key Function Register Definition

Register Name	Bit							
	7	6	5	4	3	2	1	0
TKTMR	D7	D6	D5	D4	D3	D2	D1	D0
TKC0	—	TKRCOV	TKST	TKCFOV	TK16OV	TSCS	TK16S1	TK16S0
TK16DL	D7	D6	D5	D4	D3	D2	D1	D0
TK16DH	D15	D14	D13	D12	D11	D10	D9	D8
TKC1	—	—	—	—	—	—	TKFS1	TKFS0
TKMn16DL	D7	D6	D5	D4	D3	D2	D1	D0
TKMn16DH	D15	D14	D13	D12	D11	D10	D9	D8
TKMnROL	D7	D6	D5	D4	D3	D2	D1	D0
TKMnROH	—	—	—	—	—	—	D9	D8
TKMnC0	MnMXS1	MnMXS0	MnDFEN	MnFILEN	MnSOFC	MnSOF2	MnSOF1	MnSOF0
TKMnC1	MnTSS	—	MnROEN	MnKOEN	MnK4EN	MnK3EN	MnK2EN	MnK1EN

Touch Key Function Register List

- **TKTMR Register**

Bit	7	6	5	4	3	2	1	0
Name	D7	D6	D5	D4	D3	D2	D1	D0
R/W	R/W	R/W	R/W	R/W	R/W	R/W	R/W	R/W
POR	0	0	0	0	0	0	0	0

Bit 7~0 **D7~D0**: Touch Key time slot 8-bit counter preload register

The touch key time slot counter preload register is used to determine the touch key time slot overflow time. The time slot unit period is obtained by a 5-bit counter and equal to 32 time slot clock cycles. Therefore, the time slot counter overflow time is equal to the following equation shown.

Time slot counter overflow time = (256-TKTMR[7:0])×32t_{TSC}, where t_{TSC} is the time slot counter clock period.

- **TKC0 Register**

Bit	7	6	5	4	3	2	1	0
Name	—	TKRCOV	TKST	TKCFOV	TK16OV	TSCS	TK16S1	TK16S0
R/W	—	R/W	R/W	R/W	R/W	R/W	R/W	R/W
POR	—	0	0	0	0	0	0	0

Bit 7 Unimplemented, read as “0”

Bit 6 **TKRCOV**: Time slot counter overflow flag
0: No overflow
1: Overflow

If module 0 or all module time slot counter, selected by the TSCS bit, is overflow, the Touch Key Interrupt request flag, TKMF, will be set and all module key OSCs and ref OSCs auto stop. All module 16-bit C/F counter, 16-bit counter, 5-bit time slot counter and 8-bit time slot timer counter will be automatically switched off.Note that this bit can’t be set “1” by application program, but can only be cleared to zero by the application program.

Bit 5 **TKST**: Start Touch Key detection control bit
0: Stopped
0→1: Started

In all modules the16-bit C/F counter, 16-bit counter, 5-bit time slot counter will be automatically cleared to zero when this bit is cleared to zero. However, the 8-bit programmable time slot counter will not be cleared to zero, which overflow time is setup by user. When this bit changes from low to high, the 16-bit C/F counter, 16-bit counter, 5-bit time slot counter and 8-bit time slot timer counter will be automatically on and enable key and reference oscillators to drive the corresponding counters.

Bit 4 **TKCFOV**: Touch Key module 16-bit C/F counter overflow flag
0: Not overflow
1: Overflow
When the Touch Key module 16-bit C/F counter overflows, this bit will be set to 1. As this flag will not be automatically cleared to zero, it has to be cleared to zero by the application program.

Bit 3 **TK16OV**: Touch Key module 16-bit counter overflow flag
0: Not overflow
1: Overflow
When the Touch Key module 16-bit counter overflows, this bit will be set to 1. As this flag will not be automatically cleared to zero, it has to be cleared to zeroby the application program.

Bit 2 **TSCS**: Touch Key time slot counter selection
0: Each Module uses its own time slot counter
1: All Touch Key Module use Module 0 time slot counter

Bit 1~0 **TK16S1~TK16S0**: The Touch Key module 16-bit counter clock source selection
00: f_{SYS}
01: $f_{SYS}/2$
10: $f_{SYS}/4$
11: $f_{SYS}/8$

• **TKC1 Register**

Bit	7	6	5	4	3	2	1	0
Name	—	—	—	—	—	—	TKFS1	TKFS0
R/W	—	—	—	—	—	—	R/W	R/W
POR	—	—	—	—	—	—	1	1

Bit 7~2 Unimplemented, read as “0”

Bit 1~0 **TKFS1~TKFS0**: Touch key oscillator and Reference oscillator frequency selection
00: 1MHz
01: 3MHz
10: 7MHz
11: 11MHz

• **TK16DL Register**

Bit	7	6	5	4	3	2	1	0
Name	D7	D6	D5	D4	D3	D2	D1	D0
R/W	R	R	R	R	R	R	R	R
POR	0	0	0	0	0	0	0	0

Bit 7~0 **D7~D0**: Touch Key 16-bit counter low byte contents

• **TK16DH Register**

Bit	7	6	5	4	3	2	1	0
Name	D15	D14	D13	D12	D11	D10	D9	D8
R/W	R	R	R	R	R	R	R	R
POR	0	0	0	0	0	0	0	0

Bit 7~0 **D15~D8**: Touch Key module 16-bit counter high byte contents
The TK16DH/TK16DL register pair is used to store the touch key function 16-bit counter value. This 16-bit countercan be used to calibrate the reference or key oscillator frequency. When the touch key time slotcounter overflows, this 16-bit counter will be stopped and the counter content will be unchanged.This register pair will be cleared to zero when the TKST bit is set low.

• **TKMn16DL Register**

Bit	7	6	5	4	3	2	1	0
Name	D7	D6	D5	D4	D3	D2	D1	D0
R/W	R	R	R	R	R	R	R	R
POR	0	0	0	0	0	0	0	0

Bit 7~0 **D7~D0**: Module n 16-bit counter low byte contents

• **TKMn16DH Register**

Bit	7	6	5	4	3	2	1	0
Name	D15	D14	D13	D12	D11	D10	D9	D8
R/W	R	R	R	R	R	R	R	R
POR	0	0	0	0	0	0	0	0

Bit 7~0 **D15~D8**: TModule n 16-bit counter high byte contents

The TKMn16DH/TKMn16DLregister pair is used to store the touch key module n 16-bit C/F counter value. This 16-bit C/Fcounter will be stopped and the counter content will be kept unchanged when the touch key time slotcounter overflows. This register pair will be cleared to zero when the TKST bit is set low.

• **TKMnROL Register**

Bit	7	6	5	4	3	2	1	0
Name	D7	D6	D5	D4	D3	D2	D1	D0
R/W	R/W	R/W	R/W	R/W	R/W	R/W	R/W	R/W
POR	0	0	0	0	0	0	0	0

Bit 7~0 **D7~D0**: Touch key module n reference oscillator internal capacitor select low byte

• **TKMnROH Register**

Bit	7	6	5	4	3	2	1	0
Name	—	—	—	—	—	—	D9	D8
R/W	—	—	—	—	—	—	R/W	R/W
POR	—	—	—	—	—	—	0	0

Bit 7~2 Unimplemented, read as “0”

Bit 1~0 **D9~D8**: Touch key module n reference oscillator internal capacitor select high byte

The TKMnROH/TKMnROLregister pair is used to store the touch key module n reference oscillator capacitor value. Thisregister pair will be loaded with the corresponding next time slot capacitor value from the dedicatedtouch key data memory at the end of the current time slot when the auto scan mode is selected.

The reference oscillator internal capacitor value = (TKMnRO[9:0]×50pF)/1024.

• **TKMnC0 Register**

Bit	7	6	5	4	3	2	1	0
Name	MnMXS1	MnMXS0	MnDFEN	MnFILEN	MnSOFC	MnSOF2	MnSOF1	MnSOF0
R/W	R/W	R/W	R/W	R/W	R/W	R/W	R/W	R/W
POR	0	0	0	0	0	0	0	0

Bit 7~6 **MnMXS1~MnMXS0**: Multiplexer Key select

Bit	Module Number			
MnMXS [1:0]	M0	M1	M2	M3
00	Key 1	Key 5	Key 9	Key 13
01	Key 2	Key 6	Key 10	Key 14
10	Key 3	Key 7	Key 11	Key 15
11	Key 4	Key 8	Key 12	Key 16
BS83B08C	√	√	—	—
BS83B12C	√	√	√	—
BS83B16C	√	√	√	√

Bit 5 **MnDFEN**: Multi-frequency control
0: Disable
1: Enable

This bit is used to control the touch key oscillator frequency doubling function. When this bit is set to 1, the key oscillator frequency will be doubled.

Bit 4 **MnFILEN**: Filter function control
0: Disable
1: Enable

Bit 3 **MnSOFC**: C to F OSC frequency hopping function control
0: The frequency hopping function is controlled by MnSOF2~MnSOF0 bits
1: The frequency hopping function is controlled by hardware

This bit is used to select the touch key oscillator frequency hopping function control method. When this bit is set to 1, the key oscillator frequency hopping function is controlled by the hardware circuit regardless of the MnSOF2~MnSOF0 bits value.

Bit 2~0 **MnSOF2~MnSOF0**: Touch Key module n Reference and Key oscillators hoppingfrequency selection
000: 1.125MHz
001: 1.111MHz
010: 1.099MHz
011: 1.085MHz
100: 1.074MHz
101: 1.059MHz
110: 1.040MHz
111: 1.020MHz

The frequency which is mentioned here will be changed when the external or internal capacitor is with different value. If the Touch Key operates at 1MHz frequency, users can adjust the frequency in scale when select other frequency.

• **TKM0C1 Register**

Bit	7	6	5	4	3	2	1	0
Name	M0TSS	—	M0ROEN	M0KOEN	M0K4EN	M0K3EN	M0K2EN	M0K1EN
R/W	R/W	—	R/W	R/W	R/W	R/W	R/W	R/W
POR	0	—	0	0	0	0	0	0

Bit 7 **M0TSS**: Touch key module 0 time slot counter clock source select
0: Touch key module 0 reference oscillator
1: $f_{SYS}/4$

Bit 6 Unimplemented, read as "0"

Bit 5 **M0ROEN**: Touch key module 0 reference oscillator enable control
0: Disable
1: Enable

Bit 4 **M0KOEN**: Touch key module 0 Key oscillator enable control
0: Disable
1: Enable

Bit 3 **M0K4EN**: Touch Key 4 control
0: Disable
1: Enable

Bit 2 **M0K3EN**: Touch Key 3 control
0: Disable
1: Enable

Bit 1 **M0K2EN**: Touch Key 2 control
0: Disable
1: Enable

Bit 0 **M0K1EN**: Touch Key 1 control
0: Disable
1: Enable

• **TKMnC1 Register**

Bit	7	6	5	4	3	2	1	0
Name	MnTSS	—	MnROEN	MnKOEN	MnK4EN	MnK3EN	MnK2EN	MnK1EN
R/W	R/W	—	R/W	R/W	R/W	R/W	R/W	R/W
POR	0	—	0	0	0	0	0	0

Bit 7 **MnTSS**: Touch key module n time slot counter clock source selection
0: Touch key module 0 reference oscillator
1: $f_{SYS}/4$

Bit 6 Unimplemented, read as "0"

Bit 5 **MnROEN**: Touch key module n reference oscillator enable control bit
0: Disable
1: Enable

Bit 4 **MnKOEN**: Touch key module n Key oscillator enable control bit
0: Disable
1: Enable

Bit 3 **MnK4EN**: Touch key module n Key 4 enable control

MnK4EN	Touch Key Module n – Mn			
	M0	M1	M2	M3
0: Disable	I/O or other functions			
1: Enable	Key4	Key8	Key12	Key16
BS83B08C	√	√	—	—
BS83B12C	√	√	√	—
BS83B16C	√	√	√	√

Bit 2 **MnK3EN**: Touch key module n Key 3 enable control

MnK3EN	Touch Key Module n – Mn			
	M0	M1	M2	M3
0: Disable	I/O or other functions			
1: Enable	Key3	Key7	Key11	Key15
BS83B08C	√	√	—	—
BS83B12C	√	√	√	—
BS83B16C	√	√	√	√

Bit 1 **MnK2EN**: Touch key module n Key 2 enable control

MnK2EN	Touch Key Module n – Mn			
	M0	M1	M2	M3
0: Disable	I/O or other functions			
1: Enable	Key2	Key6	Key10	Key14
BS83B08C	√	√	—	—
BS83B12C	√	√	√	—
BS83B16C	√	√	√	√

Bit 0 **MnK1EN**: Touch key module n Key 1 enable control

MnK1EN	Touch Key Module n – Mn			
	M0	M1	M2	M3
0: Disable	I/O or other functions			
1: Enable	Key1	Key5	Key9	Key13
BS83B08C	√	√	—	—
BS83B12C	√	√	√	—
BS83B16C	√	√	√	√

Touch Key Operation

When a finger touches or is in proximity to a touch pad, the capacitance of the pad will increase. By using this capacitance variation to change slightly the frequency of the internal sense oscillator, touch actions can be sensed by measuring these frequency changes. Using an internal programmable divider the reference clock is used to generate a fixed time period. By counting a number of generated clock cycles from the sense oscillator during this fixed time period Touch Key actions can be determined.

The Touch Key sense oscillator and reference oscillator timing diagram is shown in the following figure.

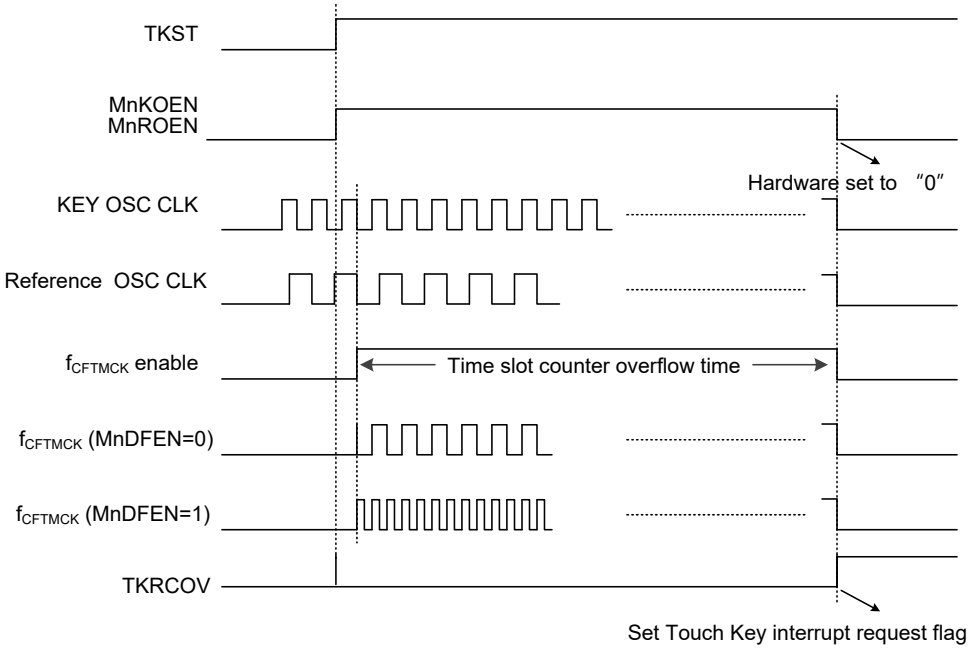

Touch Key Timing Diagram

Each Touch Key module contains four Touch Key inputs which are shared with logical I/O pins, and the desired function is selected using register bits. Each Touch Key has its own independent sense oscillator. There are therefore four sense oscillators within each Touch Key module.

During this reference clock fixed interval, the number of clock cycles generated by the sense oscillator is measured, and it is this value that is used to determine if a touch action has been made or not. At the end of the fixed reference clock time interval a Touch Key interrupt signal will be generated.

Using the TSCS bit in the TKC0 register can select the module 0 time slot counter as the time slot counter for all modules. All modules use the same started signal, TKST, in the TKC0 register. The 16-bit C/F counter, 16-bit counter, 5-bit time slot counter in all modules will be automatically cleared when this bit is cleared to zero, but the 8-bit programmable time slot counter will not be cleared. The overflow time is setup by user.When this bit changes from low to high, the 16-bit C/F counter, 16-bit counter, 5-bit time slot counter and 8-bit time slot timer counter will be automatically switched on.

The key oscillator and reference oscillator in all modules will be automatically stopped and the 16-bit C/F counter, 16-bit counter, 5-bit time slot counter and 8-bit time slot timer counter will be automatically switched off when the 5-bit time slot counter overflows. The clock source for the time slot counter and 8+5 bit counter, is sourced from the reference oscillator or $f_{SYS}/4$. The reference oscillator and key oscillator will be enabled by setting the MnROEN bit and MnKOEN bits in the TKMnC1 register.

When the time slot counter in all the Touch Key modules or in the Touch Key module 0 overflows, an actual Touch Key interrupt will take place. The Touch Keys mentioned here are the keys which are enabled.

Each Touch Key module consists of four Touch Keys, Key1~Key4 are contained in module 0, Key5~Key8 are contained in module 1, Key9~Key12 are contained in module 2, Key13~Key16 are contained in module 3. Each Touch Key module has an identical structure.

Touch Key Interrupt

The Touch Key only has single interrupt, when the time slot counter in all the Touch Key modules or in the Touch Key module 0 overflows, an actual Touch Key interrupt will take place. The Touch Keys mentioned here are the keys which are enabled. The 16-bit C/F counter, 16-bit counter, 5-bit time slot counter and 8-bit time slot counter in all modules will be automatically cleared. More details regarding the Touch Key interrupt is located in the interrupt section of the datasheet.

Programming Considerations

After the relevant registers are setup, the Touch Key detection process is initiated the changing the TKST bit from low to high. This will enable and synchronise all relevant oscillators. The TKRCOV flag, which is the time slot counter flag will go high and remain high until the counter overflows. When this happens an interrupt signal will be generated.

When the external Touch Key size and layout are defined, their related capacitances will then determine the sensor oscillator frequency.

Serial Interface Module – SIM

These devices contain a Serial Interface Module, which includes both the four-line SPI interface or two-line I^2C interface types, to allow an easy method of communication with external peripheral hardware. Having relatively simple communication protocols, these serial interface types allow the microcontroller to interface to external SPI or I^2C based hardware such as sensors, Flash or EEPROM memory, etc. The SIM interface pins are pin-shared with other I/O pins and therefore the SIM interface functional pins must first be selected using the relevant bit SIMEN bit in the SIMC0 register. As both interface types share the same pins and registers, the choice of whether the SPI or I^2C type is used is made using the SIM operating mode control bits, named SIM2~SIM0, in the SIMC0 register. These pull-high resistors of the SIM pin-shared I/O pins are selected using pull-high control registers when the SIM function is enabled and the corresponding pins are used as SIM input pins.

SPI Interface

The SPI interface is often used to communicate with external peripheral devices such as sensors, Flash or EEPROM memory devices, etc. Originally developed by Motorola, the four line SPI interface is a synchronous serial data interface that has a relatively simple communication protocol simplifying the programming requirements when communicating with external hardware devices.

The communication is full duplex and operates as a slave/master type, where the device can be either master or slave. Although the SPI interface specification can control multiple slave devices from a single master, the device provides only one $\overline{SCS}$ pin. If the master needs to control multiple slave devices from a single master, the master can use I/O pin to select the slave devices.

SPI Interface Operation

The SPI interface is a full duplex synchronous serial data link. It is a four line interface with pin names SDI, SDO, SCK and $\overline{SCS}$. Pins SDI and SDO are the Serial Data Input and Serial Data Output lines, SCK is the Serial Clock line and $\overline{SCS}$ is the Slave Select line. As the SPI interface pins are pin-shared with normal I/O pins and with the I^2C function pins, the SPI interface pins must first be selected by setting the correct bits in the SIMC0 and SIMC2 registers. After the desired SPI configuration has been set it can be disabled or enabled using the SIMEN bit in the SIMC0 register. Communication between devices connected to the SPI interface is carried out in a slave/master mode with all data transfer initiations being implemented by the master. The Master also controls the clock signal. As the device only contains a single $\overline{SCS}$ pin only one slave device can be utilized. The $\overline{SCS}$ pin is controlled by software, set CSEN bit to 1 to enable $\overline{SCS}$ pin function, set CSEN bit to 0 the $\overline{SCS}$ pin will be floating state.

The SPI function in these devices offer the following features:

- Full duplex synchronous data transfer
- Both Master and Slave modes
- LSB first or MSB first data transmission modes
- Transmission complete flag
- Rising or falling active clock edge

The status of the SPI interface pins is determined by a number of factors such as whether the device is in the master or slave mode and upon the condition of certain control bits such as CSEN and SIMEN.

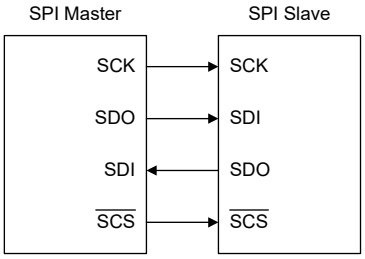

SPI Master/Slave Connection

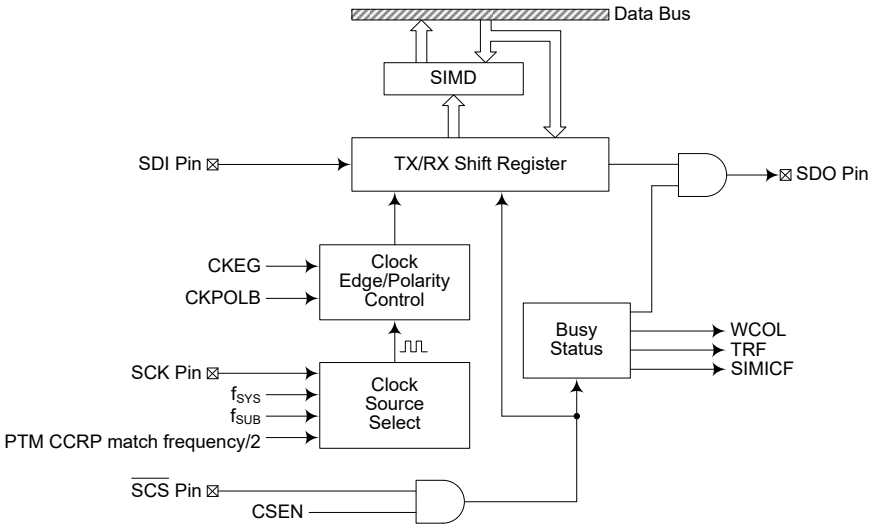

SPI Block Diagram

SPI Registers

There are three internal registers which control the overall operation of the SPI interface. These are the SIMD data register and two registers SIMC0 and SIMC2. Note that the SIMC1 register is only used by the I²C interface.

Register Name	Bit							
	7	6	5	4	3	2	1	0
SIMC0	SIM2	SIM1	SIM0	—	SIMDEB1	SIMDEB0	SIMEN	SIMICF
SIMC2	D7	D6	CKPOLB	CKEG	MLS	CSEN	WCOL	TRF
SIMD	D7	D6	D5	D4	D3	D2	D1	D0

SPI Register List

SIMD Register

The SIMD register is used to store the data being transmitted and received. The same register is used by both the SPI and I²C functions. Before the device writes data to the SPI bus, the actual data to be transmitted must be placed in the SIMD register. After the data is received from the SPI bus, the device can read it from the SIMD register. Any transmission or reception of data from the SPI bus must be made via the SIMD register.

Bit	7	6	5	4	3	2	1	0
Name	D7	D6	D5	D4	D3	D2	D1	D0
R/W	R/W	R/W	R/W	R/W	R/W	R/W	R/W	R/W
POR	x	x	x	x	x	x	x	x

"x": Unknown

There are also two control registers for the SPI interface, SIMC0 and SIMC2. Note that the SIMC2 register also has the name SIMA which is used by the I²C function. The SIMC1 register is not used by the SPI function, only by the I²C function. Register SIMC0 is used to control the enable/disable function and to set the data transmission clock frequency. Register SIMC2 is used for other control functions such as LSB/MSB selection, write collision flag, etc.

- **SIMC0 Register**

Bit	7	6	5	4	3	2	1	0
Name	SIM2	SIM1	SIM0	—	SIMDEB1	SIMDEB0	SIMEN	SIMICF
R/W	R/W	R/W	R/W	—	R/W	R/W	R/W	R/W
POR	1	1	1	—	0	0	0	0

Bit 7~5 **SIM2~SIM0**: SIM Operating Mode Control
000: SPI master mode; SPI clock is $f_{SYS}/4$
001: SPI master mode; SPI clock is $f_{SYS}/16$
010: SPI master mode; SPI clock is $f_{SYS}/64$
011: SPI master mode; SPI clock is f_{SUB}
100: SPI master mode; SPI clock is PTM CCRP match frequency/2
101: SPI slave mode
110: I²C slave mode
111: Non SIM function
These bits setup the overall operating mode of the SIM function. As well as selecting if the I²C or SPI function, they are used to control the SPI Master/Slave selection and the SPI Master clock frequency. The SPI clock is a function of the system clock but can also be chosen to be sourced from PTM and f_{SUB}. If the SPI Slave Mode is selected then the clock will be supplied by an external Master device.

Bit 4 Unimplemented, read as "0"

Bit 3~2 **SIMDEB1~SIMDEB0**: I²C Debounce Time Selection
These bits are only used for the I²C mode of SIM and are described in the I²C registers section.

Bit 1 **SIMEN**: SIM Enable Control
0: Disable
1: Enable
The bit is the overall on/off control for the SIM interface. When the SIMEN bit is cleared to zero to disable the SIM interface, the SDI, SDO, SCK and $\overline{SCS}$, or SDA and SCL lines will lose their SPI or I^2C function and the SIM operating current will be reduced to a minimum value. When the bit is high the SIM interface is enabled. The SIM configuration option must have first enabled the SIM interface for this bit to be effective.If the SIM is configured to operate as an SPI interface via the SIM2~SIM0 bits, the contents of the SPI control registers will remain at the previous settings when the SIMEN bit changes from low to high and should therefore be first initialised by the application program. If the SIM is configured to operate as an I^2C interface via the SIM2~SIM0 bits and the SIMEN bit changes from low to high, the contents of the I^2C control bits such as HTX and TXAK will remain at the previous settings and should therefore be first initialised by the application program while the relevant I^2C flags such as HCF, HAAS, HBB, SRW and RXAK will be set to their default states.

Bit 0 **SIMICF**: SIM Incomplete Flag
0: SIM SPI incomplete condition not occurred
1: SIM SPI incomplete condition occured
This bit is only available when the SIM is configured to operate in an SPI slave mode. If the SPI operates in the slave mode with the SIMEN and CSEN bits both being set to 1 but the $\overline{SCS}$ line is pulled high by the external master device before the SPI data transfer is completely finished, the SIMICF bit will be set to 1 together with the TRF bit. When this condition occurs, the corresponding interrupt will occur if the interrupt function is enabled. However, the TRF bit will not be set to 1 if the SIMICF bit is set to 1 by software application program.

• SIMC2 Register

Bit	7	6	5	4	3	2	1	0
Name	D7	D6	CKPOLB	CKEG	MLS	CSEN	WCOL	TRF
R/W	R/W	R/W	R/W	R/W	R/W	R/W	R/W	R/W
POR	0	0	0	0	0	0	0	0

Bit 7~6 **D7~D6**: Undefined bits
These bits can be read or written by the application program.

Bit 5 **CKPOLB**: SPI clock line base condition selection
0: The SCK line will be high when the clock is inactive
1: The SCK line will be low when the clock is inactive
The CKPOLB bit determines the base condition of the clock line, if the bit is high, then the SCK line will be low when the clock is inactive. When the CKPOLB bit is low, then the SCK line will be high when the clock is inactive.

Bit 4 **CKEG**: SPI SCK clock active edge type selection
CKPOLB=0
0: SCK is high base level and data capture at SCK rising edge
1: SCK is high base level and data capture at SCK falling edge
CKPOLB=1
0: SCK is low base level and data capture at SCK falling edge
1: SCK is low base level and data capture at SCK rising edge
The CKEG and CKPOLB bits are used to setup the way that the clock signal outputs and inputs data on the SPI bus. These two bits must be configured before data transfer is executed otherwise an erroneous clock edge may be generated. The CKPOLB bit determines the base condition of the clock line, if the bit is high, then the SCK line will be low when the clock is inactive. When the CKPOLB bit is low, then the SCK line will be high when the clock is inactive. The CKEG bit determines active clock edge type which depends upon the condition of CKPOLB bit.

Bit 3 **MLS**: SPI data shift order
0: LSB first
1: MSB first
This is the data shift select bit and is used to select how the data is transferred, either MSB or LSB first. Setting the bit high will select MSB first and low for LSB first.

Bit 2 **CSEN**: SPI $\overline{\text{SCS}}$ pin control
0: Disable
1: Enable
The CSEN bit is used as an enable/disable for the $\overline{\text{SCS}}$ pin. If this bit is low, then the $\overline{\text{SCS}}$ pin will be disabled and placed into a floating condition. If the bit is high, the $\overline{\text{SCS}}$ pin will be enabled and used as a select pin.

Bit 1 **WCOL**: SPI write collision flag
0: No collision
1: Collision
The WCOL flag is used to detect whether a data collision has occurred or not. If this bit is high, it means that data has been attempted to be written to the SIMD register duting a data transfer operation. This writing operation will be ignored if data is being transferred. This bit can be cleared to 0 by the application program.

Bit 0 **TRF**: SPI Transmit/Receive complete flag
0: SPI data is being transferred
1: SPI data transfer is completed
The TRF bit is the Transmit/Receive Complete flag and is set to 1 automatically when an SPI data transfer is completed, but must cleared to 0 by the application program. It can be used to generate an interrupt.

SPI Communication

After the SPI interface is enabled by setting the SIMEN bit high, then in the Master Mode, when data is written to the SIMD register, transmission/reception will begin simultaneously. When the data transfer is complete, the TRF flag will be set automatically, but must be cleared using the application program. In the Slave Mode, when the clock signal from the master has been received, any data in the SIMD register will be transmitted and any data on the SDI pin will be shifted into the SIMD register. The master should output a $\overline{\text{SCS}}$ signal to enable the slave devices before a clock signal is provided. The slave data to be transferred should be well prepared at the appropriate moment relative to the SCK signal depending upon the configurations of the CKPOLB bit and CKEG bit. The accompanying timing diagram shows the relationship between the slave data and SCK signal for various configurations of the CKPOLB and CKEG bits.

The SPI master mode will continue to function even in the IDLE Mode if the selected SPI clock source is running.

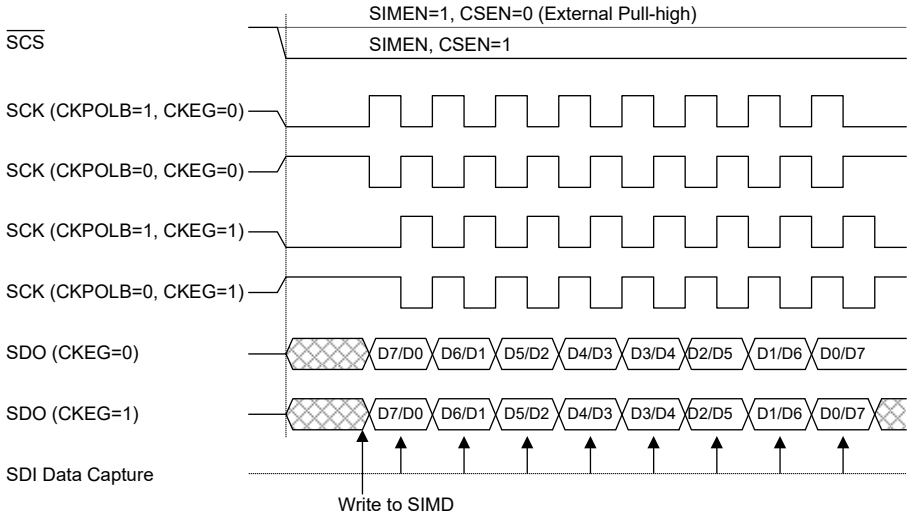

SPI Master Mode Timing

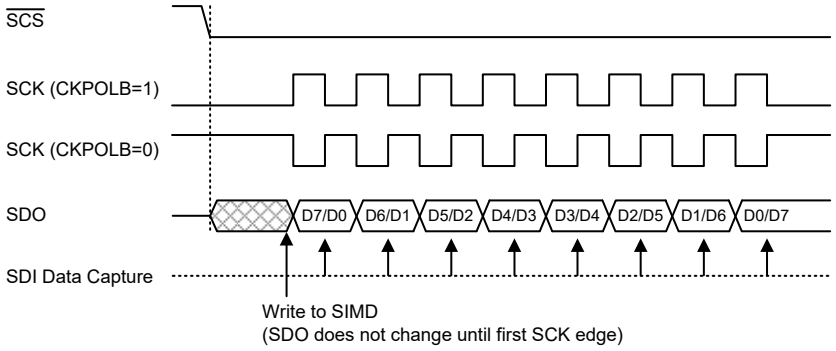

SPI Slave Mode Timing – CKEG=0

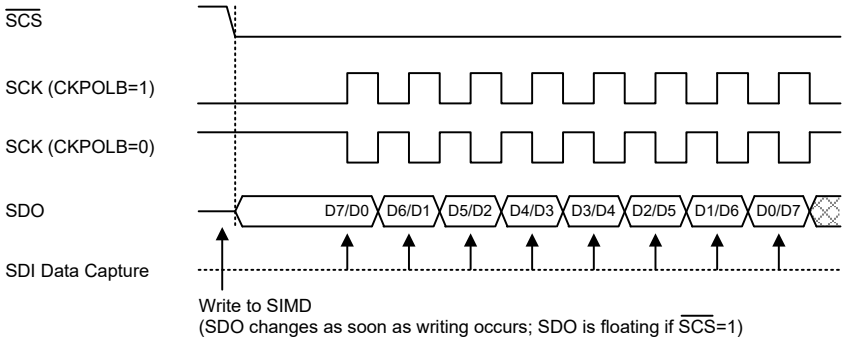

Note: For SPI slave mode, if SIMEN=1 and CSEN=0, SPI is always enabled and ignores the $\overline{SCS}$ level.

SPI Slave Mode Timing – CKEG=1

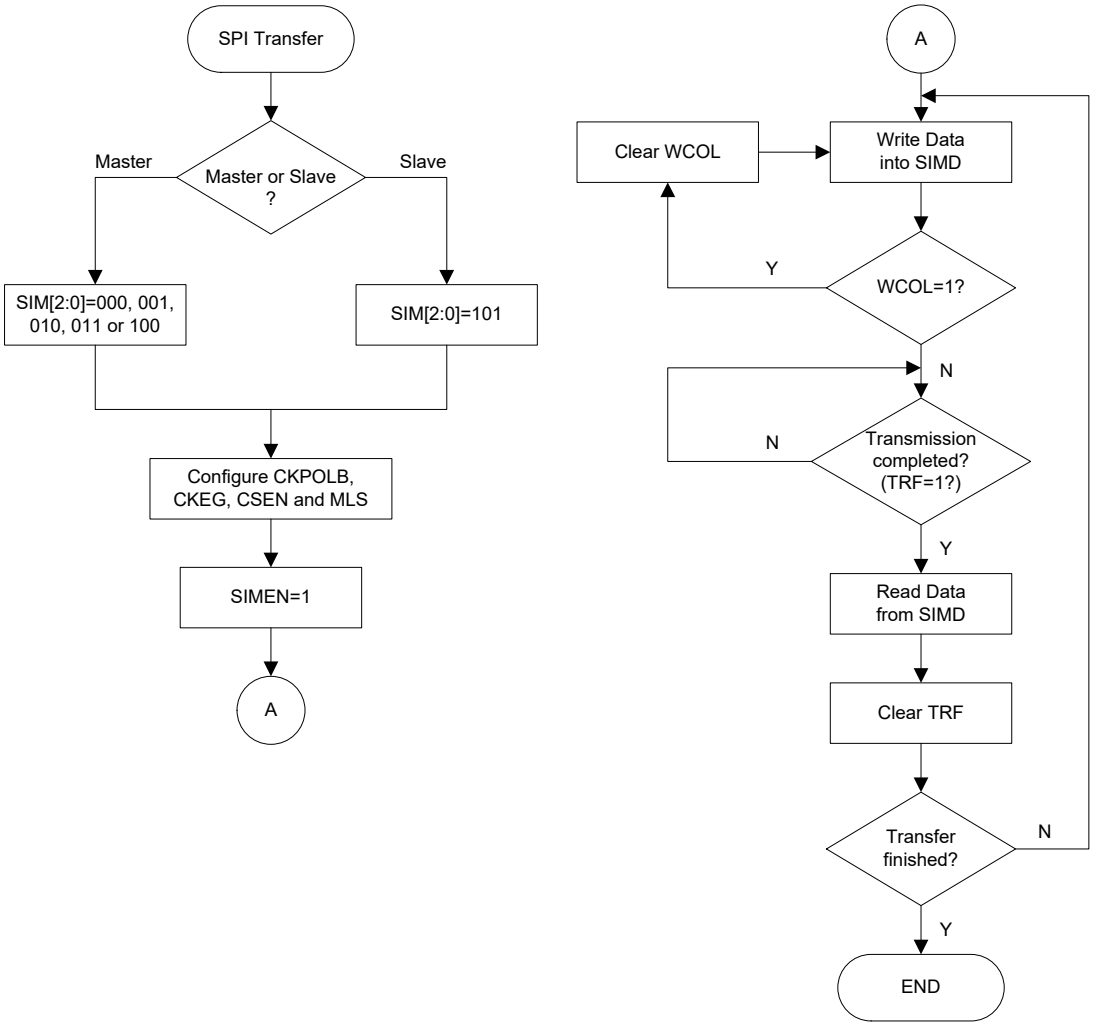

SPI Transfer Control Flow Chart

I²C Interface

The I²C interface is used to communicate with external peripheral devices such as sensors, EEPROM memory etc. Originally developed by Philips, it is a two line low speed serial interface for synchronous serial data transfer. The advantage of only two lines for communication, relatively simple communication protocol and the ability to accommodate multiple devices on the same bus has made it an extremely popular interface type for many applications.

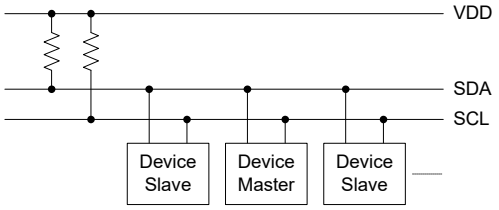

I²C Master Slave Bus Connection

I²C interface Operation

The I²C serial interface is a two line interface, a serial data line, SDA, and serial clock line, SCL. As many devices may be connected together on the same bus, their outputs are both open drain types. For this reason it is necessary that external pull-high resistors are connected to these outputs. Note that no chip select line exists, as each device on the I²C bus is identified by a unique address which will be transmitted and received on the I²C bus.

When two devices communicate with each other on the bidirectional I²C bus, one is known as the master device and one as the slave device. Both master and slave can transmit and receive data, however, it is the master device that has overall control of the bus. For the device, which only operates in slave mode, there are two methods of transferring data on the I²C bus, the slave transmit mode and the slave receive mode.

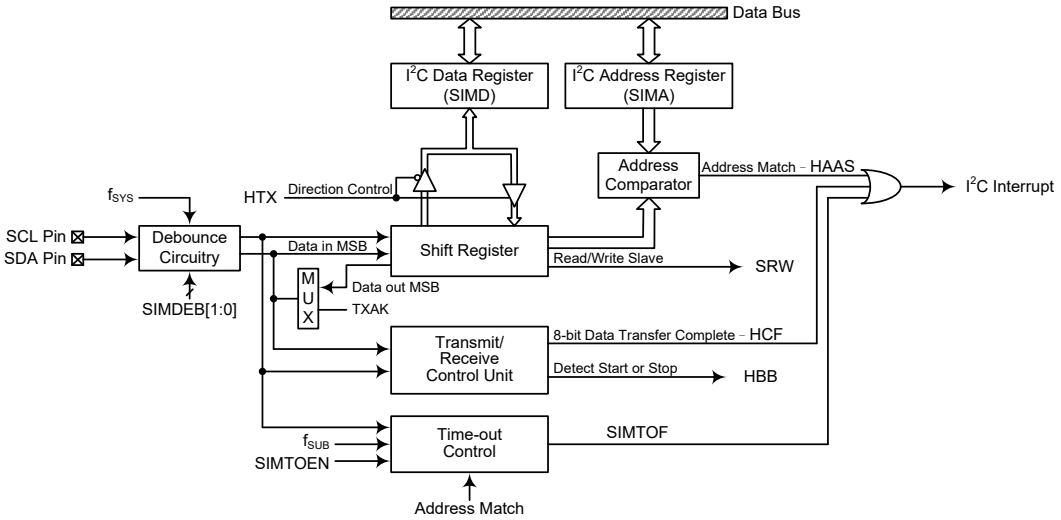

I²C Block Diagram

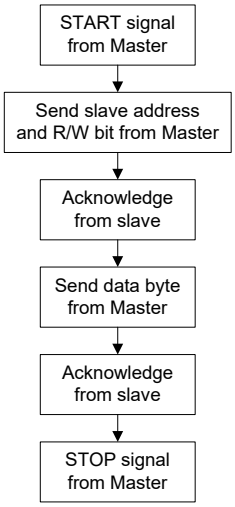

I²C Interface Operation

The SIMDEB1 and SIMDEB0 bits determine the debounce time of the I²C interface. This uses the system clock to in effect add a debounce time to the external clock to reduce the possibility of glitches on the clock line causing erroneous operation. The debounce time, if selected, can be chosen to be either 2 or 4 system clocks. To achieve the required I²C data transfer speed, there exists a relationship between the system clock, f_{SYS}, and the I²C debounce time. For either the I²C Standard or Fast mode operation, users must take care of the selected system clock frequency and the configured debounce time to match the criterion shown in the following table.

I²C Debounce Time Selection	I²C Standard Mode (100kHz)	I²C Fast Mode (400kHz)
No Devounce	f_{SYS} > 2MHz	f_{SYS} > 5MHz
2 system clock debounce	f_{SYS} > 4MHz	f_{SYS} > 10MHz
4 system clock debounce	f_{SYS} > 8MHz	f_{SYS} > 20MHz

I²C Minimum f_{SYS} Frequency Requirements

I²C Registers

There are three control registers associated with the I²C bus, SIMC0, SIMC1 and SIMTOC, one slave address register, SIMA, and one data register, SIMD. The SIMD register, which is shown in the above SPI section, is used to store the data being transmitted and received on the I²C bus. Before the microcontroller writes data to the I²C bus, the actual data to be transmitted must be placed in the SIMD register. After the data is received from the I²C bus, the microcontroller can read it from the SIMD register. Any transmission or reception of data from the I²C bus must be made via the SIMD register.

Note that the SIMA register also has the name SIMC2 which is used by the SPI function. Bit SIMEN and bits SIM2~SIM0 in register SIMC0 are used by the I²C interface.

Register Name	Bit							
	7	6	5	4	3	2	1	0
SIMC0	SIM2	SIM1	SIM0	—	SIMDEB1	SIMDEB0	SIMEN	SIMICF
SIMC1	HCF	HAAS	HBB	HTX	TXAK	SRW	IAMWU	RXAK
SIMA	SIMA6	SIMA5	SIMA4	SIMA3	SIMA2	SIMA1	SIMA0	D0
SIMD	D7	D6	D5	D4	D3	D2	D1	D0
SIMTOC	SIMTOEN	SIMTOF	SIMTOS5	SIMTOS4	SIMTOS3	SIMTOS2	SIMTOS1	SIMTOS0

I²C Register List

• **SIMD Register**

The SIMD register is used to store the data being transmitted and received. The same register is used by both the SPI and I²C functions. Before the device writes data to the I²C bus, the actual data to be transmitted must be placed in the SIMD register. After the data is received from the I²C bus, the device can read it from the SIMD register. Any transmission or reception of data from the I²C bus must be made via the SIMD register.

Bit	7	6	5	4	3	2	1	0
Name	D7	D6	D5	D4	D3	D2	D1	D0
R/W	R/W	R/W	R/W	R/W	R/W	R/W	R/W	R/W
POR	x	x	x	x	x	x	x	x

"x": Unknown

• **SIMA Register**

The SIMA register is also used by the SPI interface but has the name SIMC2. The SIMA register is the location where the 7-bit slave address of the slave device is stored. Bits 7~1 of the SIMA register define the device slave address. Bit 0 is not defined.

When a master device, which is connected to the I²C bus, sends out an address, which matches the slave address in the SIMA register, the slave device will be selected. Note that the SIMA register is the same register address as SIMC2 which is used by the SPI interface.

Bit	7	6	5	4	3	2	1	0
Name	SIMA6	SIMA5	SIMA4	SIMA3	SIMA2	SIMA1	SIMA0	D0
R/W	R/W	R/W	R/W	R/W	R/W	R/W	R/W	R/W
POR	x	x	x	x	x	x	x	x

"x": Unknown

Bit 7~1 **SIMA6~SIMA0**: I²C slave address
SIMA6~SIMA0 is the I²C slave address bit 6 ~ bit 0

Bit 0 **D0**: Undefined bit
The bit can be read or written by the application program.

There are also three control registers for the I²C interface, SIMC0, SIMC1 and SIMTOC. The register SIMC0 is used to control the enable/disable function and to set the data transmission clock frequency.The SIMC1 register contains the relevant flags which are used to indicate the I²C communication status. The SIMTOC register is used to control the I²C bus time-out function which is described in the I²C Time-out Control section.

• **SIMC0 Register**

Bit	7	6	5	4	3	2	1	0
Name	SIM2	SIM1	SIM0	—	SIMDEB1	SIMDEB0	SIMEN	SIMICF
R/W	R/W	R/W	R/W	—	R/W	R/W	R/W	R/W
POR	1	1	1	—	0	0	0	0

Bit 7~5 **SIM2~SIM0**: SIM Operating Mode Control
000: SPI master mode; SPI clock is $f_{SYS}/4$
001: SPI master mode; SPI clock is $f_{SYS}/16$
010: SPI master mode; SPI clock is $f_{SYS}/64$
011: SPI master mode; SPI clock is f_{SUB}
100: SPI master mode; SPI clock is PTM CCRP match frequency/2
101: SPI slave mode
110: I²C slave mode
111: Non SIM function

These bits setup the overall operating mode of the SIM function. As well as selecting if the I²C or SPI function, they are used to control the SPI Master/Slave selection and the SPI Master clock frequency. The SPI clock is a function of the system clock but can also be chosen to be sourced from PTM and f_{SUB}. If the SPI Slave Mode is selected then the clock will be supplied by an external Master device.

Bit 4 Unimplemented, read as "0"

Bit 3~2 **SIMDEB1~SIMDEB0**: I²C Debounce Time Selection
00: No debounce
01: 2 system clock debounce
1x: 4 system clock debounce

Bit 1 **SIMEN**: SIM Enable Control
0: Disable
1: Enable

The bit is the overall on/off control for the SIM interface. When the SIMEN bit is cleared to zero to disable the SIM interface, the SDI, SDO, SCK and $\overline{SCS}$, or SDA and SCL lines will lose their SPI or I²C function and the SIM operating current will be reduced to a minimum value. When the bit is high the SIM interface is enabled. The SIM configuration option must have first enabled the SIM interface for this bit to be effective.If the SIM is configured to operate as an SPI interface via the SIM2~SIM0 bits, the contents of the SPI control registers will remain at the previous settings when the SIMEN bit changes from low to high and should therefore be first initialised by the application program. If the SIM is configured to operate as an I²C interface via the SIM2~SIM0 bits and the SIMEN bit changes from low to high, the contents of the I²C control bits such as HTX and TXAK will remain at the previous settings and should therefore be first initialised by the application program while the relevant I²C flags such as HCF, HAAS, HBB, SRW and RXAK will be set to their default states.

Bit 0 **SIMICF**: SIM Incomplete Flag
0: SIM incomplete condition not occurred
1: SIM incomplete condition occured

This bit is only used for the SPI mode of SIM and is described in the SPI registers section.

- **SIMC1 Register**

Bit	7	6	5	4	3	2	1	0
Name	HCF	HAAS	HBB	HTX	TXAK	SRW	IAMWU	RXAK
R/W	R	R	R	R/W	R/W	R/W	R/W	R
POR	1	0	0	0	0	0	0	1

Bit 7 **HCF**: I²C Bus data transfer completion flag
0: Data is being transferred
1: Completion of an 8-bit data transfer

The HCF flag is the data transfer flag. This flag will be zero when data is being transferred. Upon completion of an 8-bit data transfer the flag will go high and an interrupt will be generated.

Bit 6 **HAAS**: I²C Bus data transfer completion flag
0: Not address match
1: Address match

The HAAS flag is the address match flag. This flag is used to determine if the slave device address is the same as the master transmit address. If the addresses match then this bit will be high, if there is no match then the flag will be low.

Bit 5 **HBB**: I²C Bus busy flag
0: I²C Bus is not busy
1: I²C Bus is busy

The HBB flag is the I²C busy flag. This flag will be "1" when the I²C bus is busy which will occur when a START signal is detected. The flag will be set to "0" when the bus is free which will occur when a STOP signal is detected.

Bit 4 **HTX**: I²C slave device transmitter/receiver selection
0: Slave device is the receiver
1: Slave device is the transmitter

Bit 3 **TXAK**: I²C bus transmit acknowledge flag
0: Slave send acknowledge flag
1: Slave does not send acknowledge flag

The TXAK bit is the transmit acknowledge flag. After the slave device receipt of 8-bits of data, this bit will be transmitted to the bus on the 9th clock from the slave device. The slave device must always set TXAK bit to "0" before further data is received.

Bit 2 **SRW**: I²C slave read/write flag
0: Slave device should be in receive mode
1: Slave device should be in transmit mode

The SRW flag is the I²C Slave Read/Write flag. This flag determines whether the master device wishes to transmit or receive data from the I²C bus. When the transmitted address and slave address is match, that is when the HAAS flag is set high, the slave device will check the SRW flag to determine whether it should be in transmit mode or receive mode. If the SRW flag is high, the master is requesting to read data from the bus, so the slave device should be in transmit mode. When the SRW flag is zero, the master will write data to the bus, therefore the slave device should be in receive mode to read this data.

Bit 1 **IAMWU**: I²C Address Match Wake-Up control
0: Disable
1: Enable

This bit should be set to 1 to enable the I²C address match wake up from the SLEEP or IDLE Mode. If the IAMWU bit has been set before entering either the SLEEP or IDLE mode to enable the I²C address match wake up, then this bit must be cleared to 0 by the application program after wake-up to ensure correction device operation.

Bit 0 **RXAK**: I²C bus receive acknowledge flag
0: Slave receives acknowledge flag
1: Slave does not receive acknowledge flag

The RXAK flag is the receiver acknowledge flag. When the RXAK flag is "0", it means that a acknowledge signal has been received at the 9th clock, after 8 bits of data have been transmitted. When the slave device in the transmit mode, the slave device checks the RXAK flag to determine if the master receiver wishes to receive the next byte. The slave transmitter will therefore continue sending out data until the RXAK flag is "1". When this occurs, the slave transmitter will release the SDA line to allow the master to send a STOP signal to release the I²C Bus.

I²C Bus Communication

Communication on the I²C bus requires four separate steps, a START signal, a slave device address transmission, a data transmission and finally a STOP signal. When a START signal is placed on the I²C bus, all devices on the bus will receive this signal and be notified of the imminent arrival of data on the bus. The first seven bits of the data will be the slave address with the first bit being the MSB. If the address of the slave device matches that of the transmitted address, the HAAS bit in the SIMC1 register will be set and an I²C interrupt will be generated. After entering the interrupt service routine, the slave device must first check the condition of the HAAS and SIMTOF bits to determine whether the interrupt source originates from an address match, 8-bit data transfer completion or I²C bus time-out occurrence. During a data transfer, note that after the 7-bit slave address has been transmitted, the following bit, which is the 8th bit, is the read/write bit whose value will be placed in the SRW bit. This bit will be checked by the slave device to determine whether to go into transmit or receive mode. Before any transfer of data to or from the I²C bus, the microcontroller must initialise the bus, the following are steps to achieve this:

- Step 1
  Set the SIM2~SIM0 bits to "110" and SIMEN bit to “1” in the SIMC0 register to enable the I²C bus.
- Step 2
  Write the slave address of the device to the I²C bus address register SIMA.
- Step 3
  Set the SIME interrupt enable bit of the interrupt control register to enable the SIM interrupt.

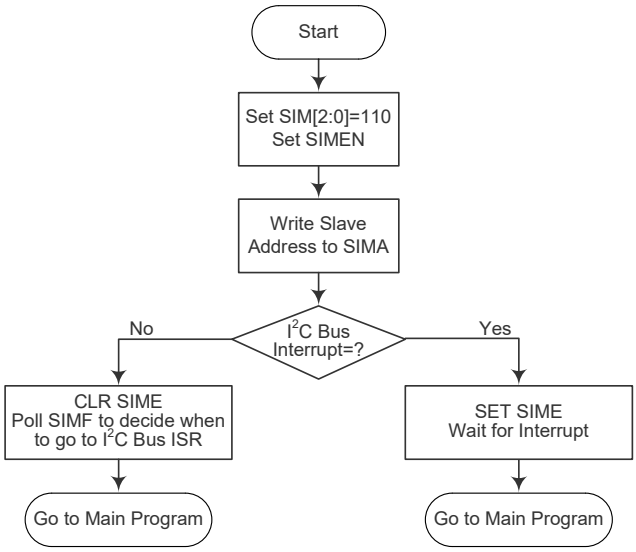

I²C Bus Initialisation Flow Chart

I²C Bus Start Signal

The START signal can only be generated by the master device connected to the I²C bus and not by the slave device. This START signal will be detected by all devices connected to the I²C bus. When detected, this indicates that the I²C bus is busy and therefore the HBB bit will be set. A START condition occurs when a high to low transition on the SDA line takes place when the SCL line remains high.

I²C Slave Address

The transmission of a START signal by the master will be detected by all devices on the I²C bus. To determine which slave device the master wishes to communicate with, the address of the slave device will be sent out immediately following the START signal. All slave devices, after receiving this 7-bit address data, will compare it with their own 7-bit slave address. If the address sent out by the master matches the internal address of the microcontroller slave device, then an internal I²C bus interrupt signal will be generated. The next bit following the address, which is the 8th bit, defines the read/write status and will be saved to the SRW bit of the SIMC1 register. The slave device will then transmit an acknowledge bit, which is a low level, as the 9th bit. The slave device will also set the status flag HAAS when the addresses match.

As an I²C bus interrupt can come from three sources, when the program enters the interrupt subroutine, the HAAS and SIMTOF bits should be examined to see whether the interrupt source has come from a matching slave address, the completion of a data byte transfer or the I²C bus time-out occurrence. When a slave address is matched, the device must be placed in either the transmit mode and then write data to the SIMD register, or in the receive mode where it must implement a dummy read from the SIMD register to release the SCL line.

I²C Bus Read/Write Signal

The SRW bit in the SIMC1 register defines whether the master device wishes to read data from the I²C bus or write data to the I²C bus. The slave device should examine this bit to determine if it is to be a transmitter or a receiver. If the SRW flag is "1" then this indicates that the master device wishes to read data from the I²C bus, therefore the slave device must be setup to send data to the I²C bus as a transmitter. If the SRW flag is "0" then this indicates that the master wishes to send data to the I²C bus, therefore the slave device must be setup to read data from the I²C bus as a receiver.

I²C Bus Slave Address Acknowledge Signal

After the master has transmitted a calling address, any slave device on the I²C bus, whose own internal address matches the calling address, must generate an acknowledge signal. The acknowledge signal will inform the master that a slave device has accepted its calling address. If no acknowledge signal is received by the master then a STOP signal must be transmitted by the master to end the communication. When the HAAS flag is high, the addresses have matched and the slave device must check the SRW flag to determine if it is to be a transmitter or a receiver. If the SRW flag is high, the slave device should be setup to be a transmitter so the HTX bit in the SIMC1 register should be set to "1". If the SRW flag is low, then the microcontroller slave device should be setup as a receiver and the HTX bit in the SIMC1 register should be set to "0".

I²C Bus Data and Acknowledge Signal

The transmitted data is 8-bits wide and is transmitted after the slave device has acknowledged receipt of its slave address. The order of serial bit transmission is the MSB first and the LSB last. After receipt of 8-bits of data, the receiver must transmit an acknowledge signal, level "0", before it can receive the next data byte. If the slave transmitter does not receive an acknowledge bit signal from the master receiver, then the slave transmitter will release the SDA line to allow the master to send a STOP signal to release the I²C Bus. The corresponding data will be stored in the SIMD register. If setup as a transmitter, the slave device must first write the data to be transmitted into the SIMD register. If setup as a receiver, the slave device must read the transmitted data from the SIMD register.

When the slave receiver receives the data byte, it must generate an acknowledge bit, known as TXAK, on the 9th clock. The slave device, which is setup as a transmitter will check the RXAK bit in the SIMC1 register to determine if it is to send another data byte, if not then it will release the SDA line and await the receipt of a STOP signal from the master.

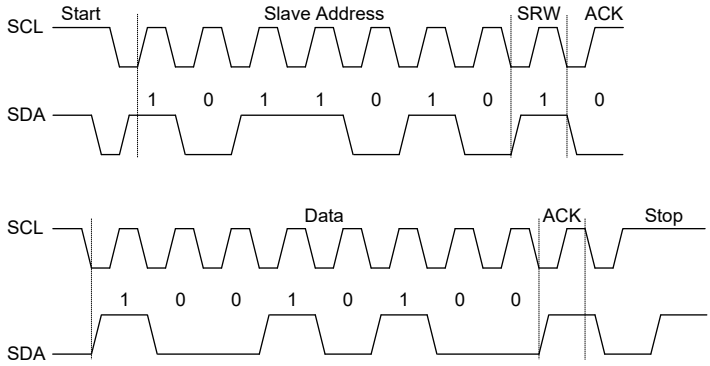

S=Start (1 bit)
SA=Slave Address (7 bits)
SR=SRW bit (1 bit)
M=Slave device send acknowledge bit (1 bit)
D=Data (8 bits)
A=ACK (RXAK bit for transmitter, TXAK bit for receiver, 1 bit)
P=Stop (1 bit)

S	SA	SR	M	D	A	D	A	……	S	SA	SR	M	D	A	D	A	……	P

I²C Communication Timing Diagram

Note: When a slave address is matched, the device must be placed in either the transmit mode and then write data to the SIMD register, or in the receive mode where it must implement a dummy read from the SIMD register to release the SCL line.

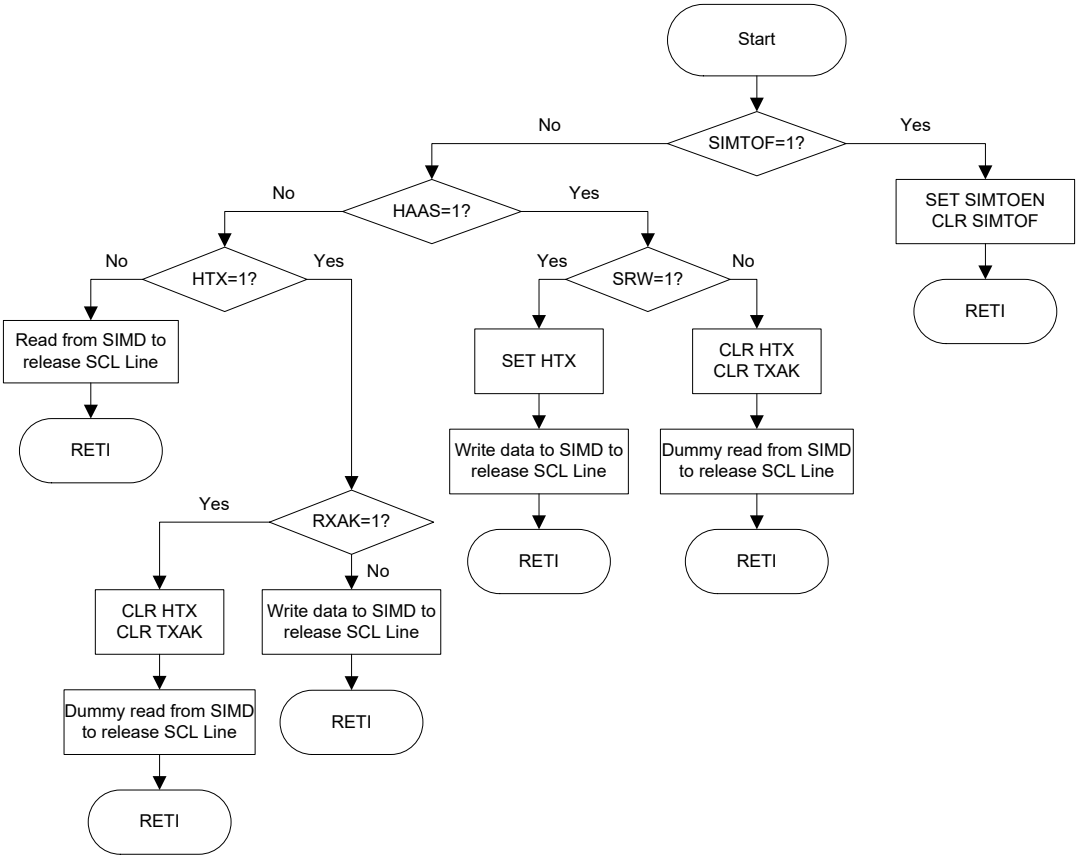

I²C Bus ISR Flow Chart

I²C Time-out Control

In order to reduce the I²C lockup problem due to reception of erroneous clock sources, a time-out function is provided. If the clock source connected to the I²C bus is not received for a while, then the I²C circuitry and registers will be reset after a certain time-out period. The time-out counter starts to count on an I²C bus "START" & "address match" condition, and is cleared by an SCL falling edge. Before the next SCL falling edge arrives, if the time elapsed is greater than the time-out period specified by the SIMTOC register, then a time-out condition will occur. The time-out function will stop when an I²C "STOP" condition occurs.

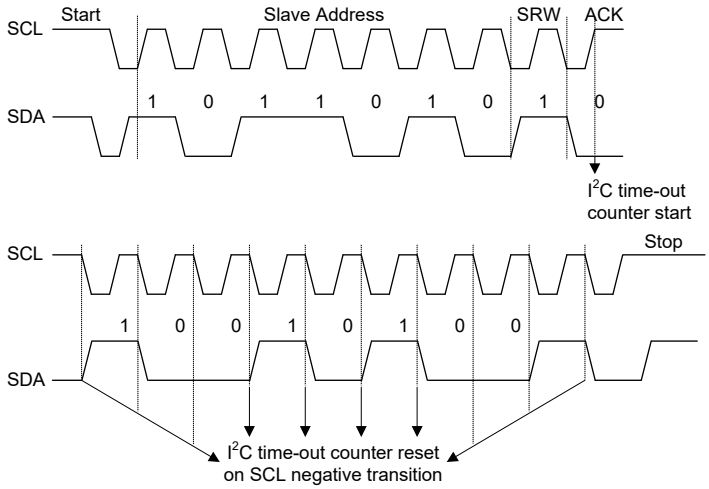

I²C Time-out

When an I²C time-out counter overflow occurs, the counter will stop and the SIMTOEN bit will be cleared to zero and the SIMTOF bit will be set high to indicate that a time-out condition has occurred. The time-out condition will also generate an interrupt which uses the I²C interrrupt vector. When an I²C time-out occurs, the I²C internal circuitry will be reset and the registers will be reset into the following condition:

Register	After I²C Time-out
SIMD, SIMA, SIMC0	No change
SIMC1	Reset to POR condition

I²C Register after Time-out

The SIMTOF flag can be cleared by the application program. There are 64 time-out period selections which can be selected using the SIMTOS bits in the SIMTOC register. The time-out duration is calculated by the formula: $((1\sim64)\times(32/f_{SUB}))$. This gives a time-out period which ranges from about 1ms to 64ms.

- **SIMTOC Register**

Bit	7	6	5	4	3	2	1	0
Name	SIMTOEN	SIMTOF	SIMTOS5	SIMTOS4	SIMTOS3	SIMTOS2	SIMTOS1	SIMTOS0
R/W	R/W	R/W	R/W	R/W	R/W	R/W	R/W	R/W
POR	0	0	0	0	0	0	0	0

Bit 7 **SIMTOEN**: SIM I²C Time-out function control
0: Disable
1: Enable

Bit 6 **SIMTOF**: SIM I²C Time-out flag
0: No time-out occurred
1: Time-out occurred

Bit 5~0 **SIMTOS5~SIMTOS0**: SIM I²C Time-out period selection
I²C Time-out clock source is $f_{SUB}/32$.
I²C time-out time is equal to $(SIMTOS[5:0]+1)\times(32/f_{SUB})$.

Interrupts

Interrupts are an important part of any microcontroller system. When an external event or an internal function such as a Touch action or Timer Module requires microcontroller attention, their corresponding interrupt will enforce a temporary suspension of the main program allowing the microcontroller to direct attention to their respective needs. These devices contain several external interrupt and internal interrupt functions. The external interrupt is generated by the action of the external INT pin, while the internal interrupts are generated by various internal functions such as the Touch Keys, TM, Time base and SIM, etc.

Interrupt Registers

Overall interrupt control, which basically means the setting of request flags when certain microcontroller conditions occur and the setting of interrupt enable bits by the application program, is controlled by a series of registers, located in the Special Purpose Data Memory, as shown in the accompanying table. The number of registers falls into three categories. The first is the INTC0~INTC1 registers which setup the primary interrupts, the second is the MFI register which setup the Multi-function interrupt. Finally there is an INTEG register to setup the external interrupt trigger edge type.

Each register contains a number of enable bits to enable or disable individual registers as well as interrupt flags to indicate the presence of an interrupt request. The naming convention of these follows a specific pattern. First is listed an abbreviated interrupt type, then the interrupt followed by either an "E" for enable/disable bit or "F" for request flag.

Function	Enable Bit	Request Flag
Global	EMI	—
INT Pin	INTE	INTF
Touch Key Module	TKME	TKMF
Time Base	TBE	TBF
Multi-function	MFE	MFF
EEPROM	DEE	DEF
SIM	SIME	SIMF
PTM	PTMPE	PTMPF
	PTMAE	PTMAF

Interrupt Register Bit Naming Conventions

Register Name	Bit							
	7	6	5	4	3	2	1	0
INTEG	—	—	—	—	—	—	INTS1	INTS0
INTC0	—	MFF	TKMF	INTF	MFE	TKME	INTE	EMI
INTC1	—	DEF	TBF	SIMF	—	DEE	TBE	SIME
MFI	—	—	PTMAF	PTMPF	—	—	PTMAE	PTMPE

Interrupt Register List

• **INTEG Register**

Bit	7	6	5	4	3	2	1	0
Name	—	—	—	—	—	—	INTS1	INTS0
R/W	—	—	—	—	—	—	R/W	R/W
POR	—	—	—	—	—	—	0	0

Bit 7~2 Unimplemented, read as "0"

Bit 1~0 **INTS1~INTS0**: External Interrupt edge control for INT pin
00: Disable
01: Rising edge
10: Falling edge
11: Rising and falling edges

• **INTC0 Register**

Bit	7	6	5	4	3	2	1	0
Name	—	MFF	TKMF	INTF	MFE	TKME	INTE	EMI
R/W	—	R/W	R/W	R/W	R/W	R/W	R/W	R/W
POR	—	0	0	0	0	0	0	0

Bit 7 Unimplemented, read as "0"

Bit 6 **MFF**: Multi-function interrupt request flag
0: No request
1: Interrupt request

Bit 5 **TKMF**: Touch Key Module interrupt request flag
0: No request
1: Interrupt request

Bit 4 **INTF**: INT interrupt request flag
0: No request
1: Interrupt request

Bit 3 **MFE**: Multi-function interrupt control
0: Disable
1: Enable

Bit 2 **TKME**: Touch Key Module interrupt control
0: Disable
1: Enable

Bit 1 **INTE**: INT interrupt control
0: Disable
1: Enable

Bit 0 **EMI**: Global interrupt control
0: Disable
1: Enable

• **INTC1 Register**

Bit	7	6	5	4	3	2	1	0
Name	—	DEF	TBF	SIMF	—	DEE	TBE	SIME
R/W	—	R/W	R/W	R/W	—	R/W	R/W	R/W
POR	—	0	0	0	—	0	0	0

Bit 7 Unimplemented, read as "0"

Bit 6 **DEF**: Data EEPROM interrupt request flag
0: No request
1: Interrupt request

Bit 5 **TBF**: Time Base interrupt request flag
0: No request
1: Interrupt request

Bit 4 **SIMF**: SIM interrupt request flag
0: No request
1: Interrupt request

Bit 3 Unimplemented, read as "0"

Bit 2 **DEE**: Data EEPROM interrupt control
0: Disable
1: Enable

Bit 1 **TBE**: Time Base interrupt control
0: Disable
1: Enable

Bit 0 **SIME**: SIM interrupt control
0: Disable
1: Enable

• **MFI Register**

Bit	7	6	5	4	3	2	1	0
Name	—	—	PTMAF	PTMPF	—	—	PTMAE	PTMPE
R/W	—	—	R/W	R/W	—	—	R/W	R/W
POR	—	—	0	0	—	—	0	0

Bit 7~6 Unimplemented, read as "0"

Bit 5 **PTMAF**: PTM Comparator A match interrupt request flag
0: No request
1: Interrupt request

Bit 4 **PTMPF**: PTM Comparator P match interrupt request flag
0: No request
1: Interrupt request

Bit 3~2 Unimplemented, read as "0"

Bit 1 **PTMAE**: PTM Comparator A match interrupt control
0: Disable
1: Enable

Bit 0 **PTMPE**: PTM Comparator P match interrupt control
0: Disable
1: Enable

Interrupt Operation

When the conditions for an interrupt event occur, such as a Touch Key counter overflow, TM Comparator P or Comparator A match, etc, the relevant interrupt request flag will be set. Whether the request flag actually generates a program jump to the relevant interrupt vector is determined by the condition of the interrupt enable bit. If the enable bit is set high then the program will jump to its relevant vector; if the enable bit is zero then although the interrupt request flag is set an actual interrupt will not be generated and the program will not jump to the relevant interrupt vector. The global interrupt enable bit, if cleared to zero, will disable all interrupts.

When an interrupt is generated, the Program Counter, which stores the address of the next instruction to be executed, will be transferred onto the stack. The Program Counter will then be loaded with a new address which will be the value of the corresponding interrupt vector. The microcontroller will then fetch its next instruction from this interrupt vector. The instruction at this vector will usually be a "JMP" which will jump to another section of program which is known as the interrupt service routine. Here is located the code to control the appropriate interrupt. The interrupt service routine must be terminated with a "RETI", which retrieves the original Program Counter address from the stack and allows the microcontroller to continue with normal execution at the point where the interrupt occurred.

The various interrupt enable bits, together with their associated request flags, are shown in the accompanying diagrams with their order of priority. Some interrupt sources have their own individual vector while others share the same multi-function interrupt vector. Once an interrupt subroutine is serviced, all the other interrupts will be blocked, as the global interrupt enable bit, EMI bit will be cleared automatically. This will prevent any further interrupt nesting from occurring. However, if other interrupt requests occur during this interval, although the interrupt will not be immediately serviced, the request flag will still be recorded.

If an interrupt requires immediate servicing while the program is already in another interrupt service routine, the EMI bit should be set after entering the routine, to allow interrupt nesting. If the stack is full, the interrupt request will not be acknowledged, even if the related interrupt is enabled, until the Stack Pointer is decremented. If immediate service is desired, the stack must be prevented from becoming full. In case of simultaneous requests, the accompanying diagram shows the priority that is applied. All of the interrupt request flags when set will wake-up these devices if it is in SLEEP or IDLE Mode, however to prevent a wake-up from occurring the corresponding flag should be set before these devices are in SLEEP or IDLE Mode.

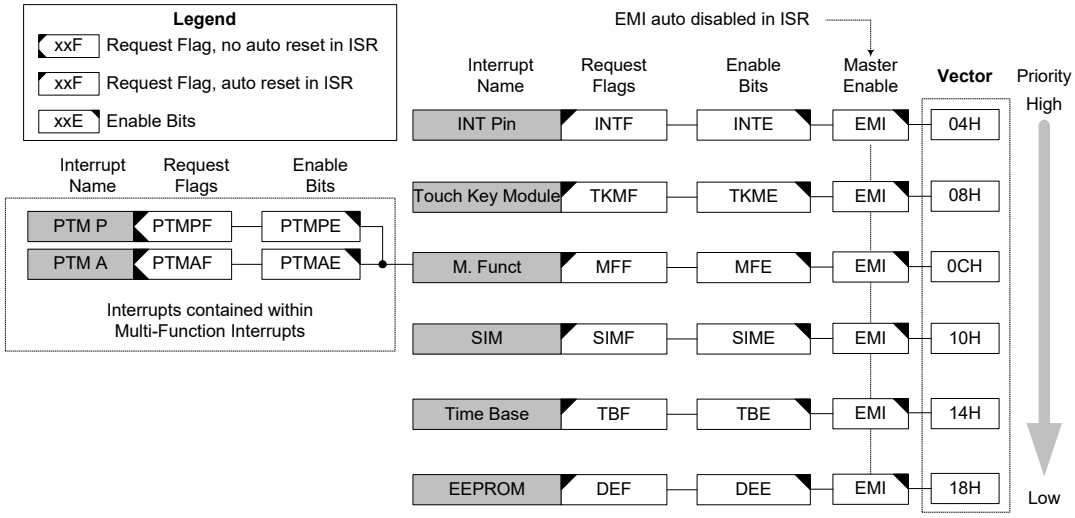

Interrupt Structure

External Interrupt

The external interrupt is controlled by signal transitions on the pin INT. An external interrupt request will take place when the external interrupt request flag, INTF, is set, which will occur when a transition, whose type is chosen by the edge select bits, appears on the external interrupt pin. To allow the program to branch to its respective interrupt vector address, the global interrupt enable bit, EMI, and respective external interrupt enable bit, INTE, must first be set. Additionally the correct interrupt edge type must be selected using the INTEG register to enable the external interrupt function and to choose the trigger edge type. As the external interrupt pin is pin-shared with I/O pin, its can only be configured as external interrupt pin if its external interrupt enable bit in the corresponding interrupt register has been set. The pin must also be setup as an input by setting the corresponding bit in the port control register. When the interrupt is enabled, the stack is not full and the correct transition type appears on the external interrupt pin, a subroutine call to the external interrupt vector, will take place. When the interrupt is serviced, the external interrupt request flag, INTF, will be automatically reset and the EMI bit will be automatically cleared to disable other interrupts. Note that any pull-high resistor selections on the external interrupt pin will remain valid even if the pin is used as an external interrupt input.

The INTEG register is used to select the type of active edge that will trigger the external interrupt. A choice of either rising or falling or both edge types can be chosen to trigger an external interrupt. Note that the INTEG register can also be used to disable the external interrupt function.

Touch Key Interrupt

For a Touch Key interrupt to occur, the global interrupt enable bit, EMI, and the Touch Key interrupt enable TKME must be first set. An actual Touch Key interrupt will take place when the Touch Key request flag. TKMF, is set, a situation that will occur when the time slot counter overflows. When the interrupt is enabled, the stack is not full and the Touch Key time slot counter overflow occurs, a subroutine call to the relevant timer interrupt vector, will take place. When the interrupt is serviced, the Touch Key interrupt request flag, TKMF, will be automatically reset and the EMI bit will be automatically cleared to disable other interrupts.

Time Base Interrupt

The function of the Time Base Interrupt is to provide regular time signal in the form of an internal interrupt. It is controlled by the overflow signal from its timer function. When this happens its interrupt request flag, TBF will be set. To allow the program to branch to its interrupt vector address, the global interrupt enable bit, EMI and Time Base enable bit, TBE, must first be set. When the interrupt is enabled, the stack is not full and the Time Base overflow, a subroutine call to its vector location will take place. When the interrupt is serviced, the interrupt request flag, TBF, will be automatically reset and the EMI bit will be cleared to disable other interrupts.

The purpose of the Time Base Interrupt is to provide an interrupt signal at fixed time periods. Its clock source, f_{PSC}, originates from the internal clock source f_{SYS}, $f_{SYS}/4$, f_{SUB} or f_H and then passes through a divider, the division ratio of which is selected by programming the appropriate bits in the TBC register to obtain longer interrupt periods whose value ranges. The clock source which in turn controls the Time Base interrupt period is selected using the CLKSEL1~CLKSEL0 bits in the PSCR register.

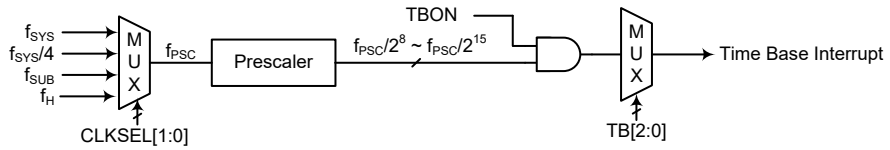

Time Base Interrupt

• **PSCR Register**

Bit	7	6	5	4	3	2	1	0
Name	—	—	—	—	—	—	CLKSEL1	CLKSEL0
R/W	—	—	—	—	—	—	R/W	R/W
POR	—	—	—	—	—	—	0	0

Bit 7~2 Unimplemented, read as "0"

Bit 1~0 **CLKSEL1~CLKSEL0**: Time Base prescaler clock source f_{PSC} selection
00: f_{SYS}
01: $f_{SYS}/4$
10: f_{SUB}
11: f_H

• **TBC Register**

Bit	7	6	5	4	3	2	1	0
Name	—	—	—	—	TBON	TB2	TB1	TB0
R/W	—	—	—	—	R/W	R/W	R/W	R/W
POR	—	—	—	—	0	0	0	0

Bit 7~4 Unimplemented, read as "0"

Bit 3 **TBON**: Time Base Control
0: Disable
1: Enable

Bit 2~0 **TB2~TB0**: Select Time Base Time-out Period
000: $2^8/f_{PSC}$
001: $2^9/f_{PSC}$
010: $2^{10}/f_{PSC}$
011: $2^{11}/f_{PSC}$
100: $2^{12}/f_{PSC}$
101: $2^{13}/f_{PSC}$
110: $2^{14}/f_{PSC}$
111: $2^{15}/f_{PSC}$

Multi-function Interrupt

Within these devices there are one Multi-function interrupt. Unlike the other independent interrupts, this interrupt has no independent source, but rather is formed from other existing interrupt sources, namely the PTM interrupts.

A Multi-function interrupt request will take place when the Multi-function interrupt request flag, MFF is set. The Multi-function interrupt flag will be set when any of their included functions generate an interrupt request flag. To allow the program to branch to its respective interrupt vector address, when the Multi-function interrupt is enabled and the stack is not full, and either one of the interrupts contained within each of Multi-function interrupt occurs, a subroutine call to one of the Multi-function interrupt vectors will take place. When the interrupt is serviced, the related Multi-Function request flag will be automatically reset and the EMI bit will be automatically cleared to disable other interrupts.

However, it must be noted that, although the Multi-function Interrupt flag will be automatically reset when the interrupt is serviced, the request flag from the original source of the Multi-function interrupt, namely the PTM interrupts, will not be automatically reset and must be manually reset by the application program.

Serial Interface Module Interrupt

The Serial Interface Module Interrupt, also known as the SIM interrupt, is controlled by the SPI or I^2C data transfer. A SIM Interrupt request will take place when the SIM Interrupt request flag, SIMF, is set, which occurs when a byte of data has been received or transmitted by the SIM interface, an I^2C slave address match or I^2C bus time-out occurrence. To allow the program to branch to its respective interrupt vector address, the global interrupt enable bit, EMI and the Serial Interface Interrupt enable bit, SIME, must first be set. When the interrupt is enabled, the stack is not full and any of the above described situations occurs, a subroutine call to the respective SIM Interrupt vector, will take place. When the Serial Interface Interrupt is serviced, the EMI bit will be automatically cleared to disable other interrupts. The SIMF flag will also be automatically cleared.

EEPROM Interrupt

An EEPROM Interrupt request will take place when the EEPROM Interrupt request flag, DEF, is set, which occurs when an EEPROM Write cycle ends. To allow the program to branch to its respective interrupt vector address, the global interrupt enable bit, EMI, and EEPROM Interrupt enable bit, DEE, must first be set. When the interrupt is enabled, the stack is not full and an EEPROM Write cycle ends, a subroutine call to the respective EEPROM Interrupt vector, will take place. When the EEPROM Interrupt is serviced, the DEF flag will be automatically cleared and the EMI bit will be automatically cleared to disable other interrupts.

TM Interrupt

The Periodic TM has two interrupts, one comes from the comparator A match situation and the other comes from the comparator P match situation. All of the TM interrupts are contained within the Multi-function Interrupt. There are two interrupt request flags and two enable control bits. A TM interrupt request will take place when any of the TM request flags are set, a situation which occurs when a TM comparator P or A match situation happens.

To allow the program to branch to its respective interrupt vector address, the global interrupt enable bit, EMI, respective TM Interrupt enable bit, and Multi-function Interrupt enable bit, MFE, must first be set. When the interrupt is enabled, the stack is not full and a TM comparator match situation occurs, a subroutine call to the Multi-function Interrupt vector location, will take place. When the TM interrupt is serviced, the EMI bit will be automatically cleared to disable other interrupts. However, only the MFF flag will be automatically cleared. As the TM interrupt request flags will not be automatically cleared, they have to be cleared by the application program.

Interrupt Wake-up Function

Each of the interrupt functions has the capability of waking up the microcontroller when in the SLEEP or IDLE Mode. A wake-up is generated when an interrupt request flag changes from low to high and is independent of whether the interrupt is enabled or not. Therefore, even though these devices are in the SLEEP or IDLE Mode and its system oscillator stopped, situations such as external edge transitions on the external interrupt pins or a low power supply voltage may cause their respective interrupt flag to be set high and consequently generate an interrupt. Care must therefore be taken if spurious wake-up situations are to be avoided. If an interrupt wake-up function is to be disabled then the corresponding interrupt request flag should be set high before these devices enter the SLEEP or IDLE Mode. The interrupt enable bits have no effect on the interrupt wake-up function.

Programming Considerations

By disabling the relevant interrupt enable bits, a requested interrupt can be prevented from being serviced, however, once an interrupt request flag is set, it will remain in this condition in the interrupt register until the corresponding interrupt is serviced or until the request flag is cleared by the application program.

Where a certain interrupt is contained within a Multi-function interrupt, then when the interrupt service routine is executed, as only the Multi-function interrupt request flag, MFF, will be automatically cleared, the individual request flag for the function needs to be cleared by the application program.

It is recommended that programs do not use the "CALL" instruction within the interrupt service subroutine. Interrupts often occur in an unpredictable manner or need to be serviced immediately. If only one stack is left and the interrupt is not well controlled, the original control sequence will be damaged once a CALL subroutine is executed in the interrupt subroutine.

Every interrupt has the capability of waking up the microcontroller when it is in the SLEEP or IDLE Mode, the wake up being generated when the interrupt request flag changes from low to high. If it is required to prevent a certain interrupt from waking up the microcontroller then its respective request flag should be first set high before enter SLEEP or IDLE Mode.

As only the Program Counter is pushed onto the stack, then when the interrupt is serviced, if the contents of the accumulator, status register or other registers are altered by the interrupt service program, their contents should be saved to the memory at the beginning of the interrupt service routine.

To return from an interrupt subroutine, either a RET or RETI instruction may be executed. The RETI instruction in addition to executing a return to the main program also automatically sets the EMI bit high to allow further interrupts. The RET instruction however only executes a return to the main program leaving the EMI bit in its present zero state and therefore disabling the execution of further interrupts.

Application Circuits

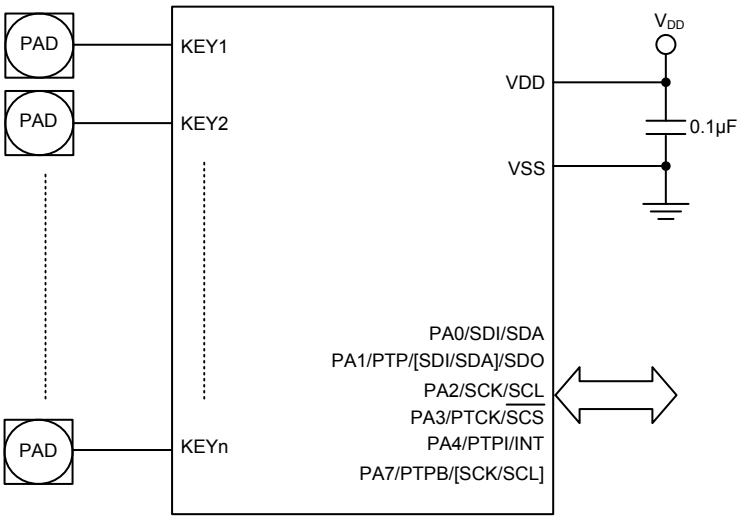

Instruction Set

Introduction

Central to the successful operation of any microcontroller is its instruction set, which is a set of program instruction codes that directs the microcontroller to perform certain operations. In the case of Holtek microcontroller, a comprehensive and flexible set of over 60 instructions is provided to enable programmers to implement their application with the minimum of programming overheads.

For easier understanding of the various instruction codes, they have been subdivided into several functional groupings.

Instruction Timing

Most instructions are implemented within one instruction cycle. The exceptions to this are branch, call, or table read instructions where two instruction cycles are required. One instruction cycle is equal to 4 system clock cycles, therefore in the case of an 8MHz system oscillator, most instructions would be implemented within 0.5μs and branch or call instructions would be implemented within 1μs. Although instructions which require one more cycle to implement are generally limited to the JMP, CALL, RET, RETI and table read instructions, it is important to realize that any other instructions which involve manipulation of the Program Counter Low register or PCL will also take one more cycle to implement. As instructions which change the contents of the PCL will imply a direct jump to that new address, one more cycle will be required. Examples of such instructions would be "CLR PCL" or "MOV PCL, A". For the case of skip instructions, it must be noted that if the result of the comparison involves a skip operation then this will also take one more cycle, if no skip is involved then only one cycle is required.

Moving and Transferring Data

The transfer of data within the microcontroller program is one of the most frequently used operations. Making use of three kinds of MOV instructions, data can be transferred from registers to the Accumulator and vice-versa as well as being able to move specific immediate data directly into the Accumulator. One of the most important data transfer applications is to receive data from the input ports and transfer data to the output ports.

Arithmetic Operations

The ability to perform certain arithmetic operations and data manipulation is a necessary feature of most microcontroller applications. Within the Holtek microcontroller instruction set are a range of add and subtract instruction mnemonics to enable the necessary arithmetic to be carried out. Care must be taken to ensure correct handling of carry and borrow data when results exceed 255 for addition and less than 0 for subtraction. The increment and decrement instructions INC, INCA, DEC and DECA provide a simple means of increasing or decreasing by a value of one of the values in the destination specified.

Logical and Rotate Operation

The standard logical operations such as AND, OR, XOR and CPL all have their own instruction within the Holtek microcontroller instruction set. As with the case of most instructions involving data manipulation, data must pass through the Accumulator which may involve additional programming steps. In all logical data operations, the zero flag may be set if the result of the operation is zero. Another form of logical data manipulation comes from the rotate instructions such as RR, RL, RRC and RLC which provide a simple means of rotating one bit right or left. Different rotate instructions exist depending on program requirements. Rotate instructions are useful for serial port programming applications where data can be rotated from an internal register into the Carry bit from where it can be examined and the necessary serial bit set high or low. Another application which rotate data operations are used is to implement multiplication and division calculations.

Branches and Control Transfer

Program branching takes the form of either jumps to specified locations using the JMP instruction or to a subroutine using the CALL instruction. They differ in the sense that in the case of a subroutine call, the program must return to the instruction immediately when the subroutine has been carried out. This is done by placing a return instruction "RET" in the subroutine which will cause the program to jump back to the address right after the CALL instruction. In the case of a JMP instruction, the program simply jumps to the desired location. There is no requirement to jump back to the original jumping off point as in the case of the CALL instruction. One special and extremely useful set of branch instructions are the conditional branches. Here a decision is first made regarding the condition of a certain data memory or individual bits. Depending upon the conditions, the program will continue with the next instruction or skip over it and jump to the following instruction. These instructions are the key to decision making and branching within the program perhaps determined by the condition of certain input switches or by the condition of internal data bits.

Bit Operations

The ability to provide single bit operations on Data Memory is an extremely flexible feature of all Holtek microcontrollers. This feature is especially useful for output port bit programming where individual bits or port pins can be directly set high or low using either the "SET [m].i" or "CLR [m].i" instructions respectively. The feature removes the need for programmers to first read the 8-bit output port, manipulate the input data to ensure that other bits are not changed and then output the port with the correct new data. This read-modify-write process is taken care of automatically when these bit operation instructions are used.

Table Read Operations

Data storage is normally implemented by using registers. However, when working with large amounts of fixed data, the volume involved often makes it inconvenient to store the fixed data in the Data Memory. To overcome this problem, Holtek microcontrollers allow an area of Program Memory to be set as a table where data can be directly stored. A set of easy to use instructions provides the means by which this fixed data can be referenced and retrieved from the Program Memory.

Other Operations

In addition to the above functional instructions, a range of other instructions also exist such as the "HALT" instruction for Power-down operations and instructions to control the operation of the Watchdog Timer for reliable program operations under extreme electric or electromagnetic environments. For their relevant operations, refer to the functional related sections.

Instruction Set Summary

The following table depicts a summary of the instruction set categorised according to function and can be consulted as a basic instruction reference using the following listed conventions.

Table Conventions

x: Bits immediate data
m: Data Memory address
A: Accumulator
i: 0~7 number of bits
addr: Program memory address

Mnemonic	Description	Cycles	Flag Affected
Arithmetic			
ADD A,[m]	Add Data Memory to ACC	1	Z, C, AC, OV
ADDM A,[m]	Add ACC to Data Memory	1 Note	Z, C, AC, OV
ADD A,x	Add immediate data to ACC	1	Z, C, AC, OV
ADC A,[m]	Add Data Memory to ACC with Carry	1	Z, C, AC, OV
ADCM A,[m]	Add ACC to Data memory with Carry	1 Note	Z, C, AC, OV
SUB A,x	Subtract immediate data from the ACC	1	Z, C, AC, OV
SUB A,[m]	Subtract Data Memory from ACC	1	Z, C, AC, OV
SUBM A,[m]	Subtract Data Memory from ACC with result in Data Memory	1 Note	Z, C, AC, OV
SBC A,[m]	Subtract Data Memory from ACC with Carry	1	Z, C, AC, OV
SBCM A,[m]	Subtract Data Memory from ACC with Carry, result in Data Memory	1 Note	Z, C, AC, OV
DAA [m]	Decimal adjust ACC for Addition with result in Data Memory	1 Note	C
Logic Operation			
AND A,[m]	Logical AND Data Memory to ACC	1	Z
OR A,[m]	Logical OR Data Memory to ACC	1	Z
XOR A,[m]	Logical XOR Data Memory to ACC	1	Z
ANDM A,[m]	Logical AND ACC to Data Memory	1 Note	Z
ORM A,[m]	Logical OR ACC to Data Memory	1 Note	Z
XORM A,[m]	Logical XOR ACC to Data Memory	1 Note	Z
AND A,x	Logical AND immediate Data to ACC	1	Z
OR A,x	Logical OR immediate Data to ACC	1	Z
XOR A,x	Logical XOR immediate Data to ACC	1	Z
CPL [m]	Complement Data Memory	1 Note	Z
CPLA [m]	Complement Data Memory with result in ACC	1	Z
Increment & Decrement			
INCA [m]	Increment Data Memory with result in ACC	1	Z
INC [m]	Increment Data Memory	1 Note	Z
DECA [m]	Decrement Data Memory with result in ACC	1	Z
DEC [m]	Decrement Data Memory	1 Note	Z
Rotate			
RRA [m]	Rotate Data Memory right with result in ACC	1	None
RR [m]	Rotate Data Memory right	1 Note	None
RRCA [m]	Rotate Data Memory right through Carry with result in ACC	1	C
RRC [m]	Rotate Data Memory right through Carry	1 Note	C
RLA [m]	Rotate Data Memory left with result in ACC	1	None
RL [m]	Rotate Data Memory left	1 Note	None
RLCA [m]	Rotate Data Memory left through Carry with result in ACC	1	C
RLC [m]	Rotate Data Memory left through Carry	1 Note	C

Mnemonic	Description	Cycles	Flag Affected
Data Move			
MOV A,[m]	Move Data Memory to ACC	1	None
MOV [m],A	Move ACC to Data Memory	1[Note]	None
MOV A,x	Move immediate data to ACC	1	None
Bit Operation			
CLR [m].i	Clear bit of Data Memory	1[Note]	None
SET [m].i	Set bit of Data Memory	1[Note]	None
Branch Operation			
JMP addr	Jump unconditionally	2	None
SZ [m]	Skip if Data Memory is zero	1[Note]	None
SZA [m]	Skip if Data Memory is zero with data movement to ACC	1[Note]	None
SZ [m].i	Skip if bit i of Data Memory is zero	1[Note]	None
SNZ [m].i	Skip if bit i of Data Memory is not zero	1[Note]	None
SIZ [m]	Skip if increment Data Memory is zero	1[Note]	None
SDZ [m]	Skip if decrement Data Memory is zero	1[Note]	None
SIZA [m]	Skip if increment Data Memory is zero with result in ACC	1[Note]	None
SDZA [m]	Skip if decrement Data Memory is zero with result in ACC	1[Note]	None
CALL addr	Subroutine call	2	None
RET	Return from subroutine	2	None
RET A,x	Return from subroutine and load immediate data to ACC	2	None
RETI	Return from interrupt	2	None
Table Read Operation			
TABRD [m]	Read table (specific page or current page) to TBLH and Data Memory	2[Note]	None
TABRDL [m]	Read table (last page) to TBLH and Data Memory	2[Note]	None
Miscellaneous			
NOP	No operation	1	None
CLR [m]	Clear Data Memory	1[Note]	None
SET [m]	Set Data Memory	1[Note]	None
CLR WDT	Clear Watchdog Timer	1	TO, PDF
SWAP [m]	Swap nibbles of Data Memory	1[Note]	None
SWAPA [m]	Swap nibbles of Data Memory with result in ACC	1	None
HALT	Enter power down mode	1	TO, PDF

Note: 1. For skip instructions, if the result of the comparison involves a skip then two cycles are required, if no skip takes place only one cycle is required.
2. Any instruction which changes the contents of the PCL will also require 2 cycles for execution.

Instruction Definition

ADC A,[m]	Add Data Memory to ACC with Carry
Description	The contents of the specified Data Memory, Accumulator and the carry flag are added. The result is stored in the Accumulator.
Operation	ACC ← ACC + [m] + C
Affected flag(s)	OV, Z, AC, C

ADCM A,[m]	Add ACC to Data Memory with Carry
Description	The contents of the specified Data Memory, Accumulator and the carry flag are added. The result is stored in the specified Data Memory.
Operation	[m] ← ACC + [m] + C
Affected flag(s)	OV, Z, AC, C

ADD A,[m]	Add Data Memory to ACC
Description	The contents of the specified Data Memory and the Accumulator are added. The result is stored in the Accumulator.
Operation	ACC ← ACC + [m]
Affected flag(s)	OV, Z, AC, C

ADD A,x	Add immediate data to ACC
Description	The contents of the Accumulator and the specified immediate data are added. The result is stored in the Accumulator.
Operation	ACC ← ACC + x
Affected flag(s)	OV, Z, AC, C

ADDM A,[m]	Add ACC to Data Memory
Description	The contents of the specified Data Memory and the Accumulator are added. The result is stored in the specified Data Memory.
Operation	[m] ← ACC + [m]
Affected flag(s)	OV, Z, AC, C

AND A,[m]	Logical AND Data Memory to ACC
Description	Data in the Accumulator and the specified Data Memory perform a bitwise logical AND operation. The result is stored in the Accumulator.
Operation	ACC ← ACC ″AND″ [m]
Affected flag(s)	Z

AND A,x	Logical AND immediate data to ACC
Description	Data in the Accumulator and the specified immediate data perform a bit wise logical AND operation. The result is stored in the Accumulator.
Operation	ACC ← ACC ″AND″ x
Affected flag(s)	Z

ANDM A,[m]	Logical AND ACC to Data Memory
Description	Data in the specified Data Memory and the Accumulator perform a bitwise logical AND operation. The result is stored in the Data Memory.
Operation	[m] ← ACC ″AND″ [m]
Affected flag(s)	Z

CALL addr	Subroutine call
Description	Unconditionally calls a subroutine at the specified address. The Program Counter then increments by 1 to obtain the address of the next instruction which is then pushed onto the stack. The specified address is then loaded and the program continues execution from this new address. As this instruction requires an additional operation, it is a two cycle instruction.
Operation	Stack ← Program Counter + 1 Program Counter ← addr
Affected flag(s)	None
CLR [m]	Clear Data Memory
Description	Each bit of the specified Data Memory is cleared to 0.
Operation	[m] ← 00H
Affected flag(s)	None
CLR [m].i	Clear bit of Data Memory
Description	Bit i of the specified Data Memory is cleared to 0.
Operation	[m].i ← 0
Affected flag(s)	None
CLR WDT	Clear Watchdog Timer
Description	The TO, PDF flags and the WDT are all cleared.
Operation	WDT cleared TO ← 0 PDF ← 0
Affected flag(s)	TO, PDF
CPL [m]	Complement Data Memory
Description	Each bit of the specified Data Memory is logically complemented (1′s complement). Bits which previously contained a 1 are changed to 0 and vice versa.
Operation	[m] ← $\overline{[m]}$
Affected flag(s)	Z
CPLA [m]	Complement Data Memory with result in ACC
Description	Each bit of the specified Data Memory is logically complemented (1′s complement). Bits which previously contained a 1 are changed to 0 and vice versa. The complemented result is stored in the Accumulator and the contents of the Data Memory remain unchanged.
Operation	ACC ← $\overline{[m]}$
Affected flag(s)	Z
DAA [m]	Decimal-Adjust ACC for addition with result in Data Memory
Description	Convert the contents of the Accumulator value to a BCD (Binary Coded Decimal) value resulting from the previous addition of two BCD variables. If the low nibble is greater than 9 or if AC flag is set, then a value of 6 will be added to the low nibble. Otherwise the low nibble remains unchanged. If the high nibble is greater than 9 or if the C flag is set, then a value of 6 will be added to the high nibble. Essentially, the decimal conversion is performed by adding 00H, 06H, 60H or 66H depending on the Accumulator and flag conditions. Only the C flag may be affected by this instruction which indicates that if the original BCD sum is greater than 100, it allows multiple precision decimal addition.
Operation	[m] ← ACC + 00H or [m] ← ACC + 06H or [m] ← ACC + 60H or [m] ← ACC + 66H
Affected flag(s)	C

DEC [m]	Decrement Data Memory
Description	Data in the specified Data Memory is decremented by 1.
Operation	[m] ← [m] − 1
Affected flag(s)	Z

DECA [m]	Decrement Data Memory with result in ACC
Description	Data in the specified Data Memory is decremented by 1. The result is stored in the Accumulator. The contents of the Data Memory remain unchanged.
Operation	ACC ← [m] − 1
Affected flag(s)	Z

HALT	Enter power down mode
Description	This instruction stops the program execution and turns off the system clock. The contents of the Data Memory and registers are retained. The WDT and prescaler are cleared. The power down flag PDF is set and the WDT time-out flag TO is cleared.
Operation	TO ← 0 PDF ← 1
Affected flag(s)	TO, PDF

INC [m]	Increment Data Memory
Description	Data in the specified Data Memory is incremented by 1.
Operation	[m] ← [m] + 1
Affected flag(s)	Z

INCA [m]	Increment Data Memory with result in ACC
Description	Data in the specified Data Memory is incremented by 1. The result is stored in the Accumulator. The contents of the Data Memory remain unchanged.
Operation	ACC ← [m] + 1
Affected flag(s)	Z

JMP addr	Jump unconditionally
Description	The contents of the Program Counter are replaced with the specified address. Program execution then continues from this new address. As this requires the insertion of a dummy instruction while the new address is loaded, it is a two cycle instruction.
Operation	Program Counter ← addr
Affected flag(s)	None

MOV A,[m]	Move Data Memory to ACC
Description	The contents of the specified Data Memory are copied to the Accumulator.
Operation	ACC ← [m]
Affected flag(s)	None

MOV A,x	Move immediate data to ACC
Description	The immediate data specified is loaded into the Accumulator.
Operation	ACC ← x
Affected flag(s)	None

MOV [m],A	Move ACC to Data Memory
Description	The contents of the Accumulator are copied to the specified Data Memory.
Operation	[m] ← ACC
Affected flag(s)	None

NOP	No operation
Description	No operation is performed. Execution continues with the next instruction.
Operation	No operation
Affected flag(s)	None

OR A,[m]	Logical OR Data Memory to ACC
Description	Data in the Accumulator and the specified Data Memory perform a bitwise logical OR operation. The result is stored in the Accumulator.
Operation	ACC ← ACC "OR" [m]
Affected flag(s)	Z

OR A,x	Logical OR immediate data to ACC
Description	Data in the Accumulator and the specified immediate data perform a bitwise logical OR operation. The result is stored in the Accumulator.
Operation	ACC ← ACC "OR" x
Affected flag(s)	Z

ORM A,[m]	Logical OR ACC to Data Memory
Description	Data in the specified Data Memory and the Accumulator perform a bitwise logical OR operation. The result is stored in the Data Memory.
Operation	[m] ← ACC "OR" [m]
Affected flag(s)	Z

RET	Return from subroutine
Description	The Program Counter is restored from the stack. Program execution continues at the restored address.
Operation	Program Counter ← Stack
Affected flag(s)	None

RET A,x	Return from subroutine and load immediate data to ACC
Description	The Program Counter is restored from the stack and the Accumulator loaded with the specified immediate data. Program execution continues at the restored address.
Operation	Program Counter ← Stack ACC ← x
Affected flag(s)	None

RETI	Return from interrupt
Description	The Program Counter is restored from the stack and the interrupts are re-enabled by setting the EMI bit. EMI is the master interrupt global enable bit. If an interrupt was pending when the RETI instruction is executed, the pending Interrupt routine will be processed before returning to the main program.
Operation	Program Counter ← Stack EMI ← 1
Affected flag(s)	None

RL [m]	Rotate Data Memory left
Description	The contents of the specified Data Memory are rotated left by 1 bit with bit 7 rotated into bit 0.
Operation	[m].(i+1) ← [m].i; (i=0~6) [m].0 ← [m].7
Affected flag(s)	None

RLA [m] Rotate Data Memory left with result in ACC

Description: The contents of the specified Data Memory are rotated left by 1 bit with bit 7 rotated into bit 0. The rotated result is stored in the Accumulator and the contents of the Data Memory remain unchanged.

Operation:
ACC.(i+1) ← [m].i; (i=0~6)
ACC.0 ← [m].7

Affected flag(s): None

RLC [m] Rotate Data Memory left through Carry

Description: The contents of the specified Data Memory and the carry flag are rotated left by 1 bit. Bit 7 replaces the Carry bit and the original carry flag is rotated into bit 0.

Operation:
[m].(i+1) ← [m].i; (i=0~6)
[m].0 ← C
C ← [m].7

Affected flag(s): C

RLCA [m] Rotate Data Memory left through Carry with result in ACC

Description: Data in the specified Data Memory and the carry flag are rotated left by 1 bit. Bit 7 replaces the Carry bit and the original carry flag is rotated into the bit 0. The rotated result is stored in the Accumulator and the contents of the Data Memory remain unchanged.

Operation:
ACC.(i+1) ← [m].i; (i=0~6)
ACC.0 ← C
C ← [m].7

Affected flag(s): C

RR [m] Rotate Data Memory right

Description: The contents of the specified Data Memory are rotated right by 1 bit with bit 0 rotated into bit 7.

Operation:
[m].i ← [m].(i+1); (i=0~6)
[m].7 ← [m].0

Affected flag(s): None

RRA [m] Rotate Data Memory right with result in ACC

Description: Data in the specified Data Memory is rotated right by 1 bit with bit 0 rotated into bit 7.
The rotated result is stored in the Accumulator and the contents of the Data Memory remain unchanged.

Operation:
ACC.i ← [m].(i+1); (i=0~6)
ACC.7 ← [m].0

Affected flag(s): None

RRC [m] Rotate Data Memory right through Carry

Description: The contents of the specified Data Memory and the carry flag are rotated right by 1 bit. Bit 0 replaces the Carry bit and the original carry flag is rotated into bit 7.

Operation:
[m].i ← [m].(i+1); (i=0~6)
[m].7 ← C
C ← [m].0

Affected flag(s): C

RRCA [m] Rotate Data Memory right through Carry with result in ACC

Description: Data in the specified Data Memory and the carry flag are rotated right by 1 bit. Bit 0 replaces the Carry bit and the original carry flag is rotated into bit 7. The rotated result is stored in the Accumulator and the contents of the Data Memory remain unchanged.

Operation:
ACC.i ← [m].(i+1); (i=0~6)
ACC.7 ← C
C ← [m].0

Affected flag(s): C

SBC A,[m] Subtract Data Memory from ACC with Carry

Description: The contents of the specified Data Memory and the complement of the carry flag are subtracted from the Accumulator. The result is stored in the Accumulator. Note that if the result of subtraction is negative, the C flag will be cleared to 0, otherwise if the result is positive or zero, the C flag will be set to 1.

Operation: $ACC \leftarrow ACC - [m] - \overline{C}$

Affected flag(s): OV, Z, AC, C

SBCM A,[m] Subtract Data Memory from ACC with Carry and result in Data Memory

Description: The contents of the specified Data Memory and the complement of the carry flag are subtracted from the Accumulator. The result is stored in the Data Memory. Note that if the result of subtraction is negative, the C flag will be cleared to 0, otherwise if the result is positive or zero, the C flag will be set to 1.

Operation: $[m] \leftarrow ACC - [m] - \overline{C}$

Affected flag(s): OV, Z, AC, C

SDZ [m] Skip if decrement Data Memory is 0

Description: The contents of the specified Data Memory are first decremented by 1. If the result is 0 the following instruction is skipped. As this requires the insertion of a dummy instruction while the next instruction is fetched, it is a two cycle instruction. If the result is not 0 the program proceeds with the following instruction.

Operation:
[m] ← [m] − 1
Skip if [m]=0

Affected flag(s): None

SDZA [m] Skip if decrement Data Memory is zero with result in ACC

Description: The contents of the specified Data Memory are first decremented by 1. If the result is 0, the following instruction is skipped. The result is stored in the Accumulator but the specified Data Memory contents remain unchanged. As this requires the insertion of a dummy instruction while the next instruction is fetched, it is a two cycle instruction. If the result is not 0, the program proceeds with the following instruction.

Operation:
ACC ← [m] − 1
Skip if ACC=0

Affected flag(s): None

SET [m] Set Data Memory

Description: Each bit of the specified Data Memory is set to 1.

Operation: [m] ← FFH

Affected flag(s): None

SET [m].i Set bit of Data Memory

Description: Bit i of the specified Data Memory is set to 1.

Operation: [m].i ← 1

Affected flag(s): None

SIZ [m]	Skip if increment Data Memory is 0
Description	The contents of the specified Data Memory are first incremented by 1. If the result is 0, the following instruction is skipped. As this requires the insertion of a dummy instruction while the next instruction is fetched, it is a two cycle instruction. If the result is not 0 the program proceeds with the following instruction.
Operation	[m] ← [m] + 1 Skip if [m]=0
Affected flag(s)	None

SIZA [m]	Skip if increment Data Memory is zero with result in ACC
Description	The contents of the specified Data Memory are first incremented by 1. If the result is 0, the following instruction is skipped. The result is stored in the Accumulator but the specified Data Memory contents remain unchanged. As this requires the insertion of a dummy instruction while the next instruction is fetched, it is a two cycle instruction. If the result is not 0 the program proceeds with the following instruction.
Operation	ACC ← [m] + 1 Skip if ACC=0
Affected flag(s)	None

SNZ [m].i	Skip if bit i of Data Memory is not 0
Description	If bit i of the specified Data Memory is not 0, the following instruction is skipped. As this requires the insertion of a dummy instruction while the next instruction is fetched, it is a two cycle instruction. If the result is 0 the program proceeds with the following instruction.
Operation	Skip if [m].i ≠ 0
Affected flag(s)	None

SUB A,[m]	Subtract Data Memory from ACC
Description	The specified Data Memory is subtracted from the contents of the Accumulator. The result is stored in the Accumulator. Note that if the result of subtraction is negative, the C flag will be cleared to 0, otherwise if the result is positive or zero, the C flag will be set to 1.
Operation	ACC ← ACC − [m]
Affected flag(s)	OV, Z, AC, C

SUBM A,[m]	Subtract Data Memory from ACC with result in Data Memory
Description	The specified Data Memory is subtracted from the contents of the Accumulator. The result is stored in the Data Memory. Note that if the result of subtraction is negative, the C flag will be cleared to 0, otherwise if the result is positive or zero, the C flag will be set to 1.
Operation	[m] ← ACC − [m]
Affected flag(s)	OV, Z, AC, C

SUB A,x	Subtract immediate data from ACC
Description	The immediate data specified by the code is subtracted from the contents of the Accumulator. The result is stored in the Accumulator. Note that if the result of subtraction is negative, the C flag will be cleared to 0, otherwise if the result is positive or zero, the C flag will be set to 1.
Operation	ACC ← ACC − x
Affected flag(s)	OV, Z, AC, C

SWAP [m]	Swap nibbles of Data Memory
Description	The low-order and high-order nibbles of the specified Data Memory are interchanged.
Operation	[m].3~[m].0 ↔ [m].7~[m].4
Affected flag(s)	None

SWAPA [m]	Swap nibbles of Data Memory with result in ACC
Description	The low-order and high-order nibbles of the specified Data Memory are interchanged. The result is stored in the Accumulator. The contents of the Data Memory remain unchanged.
Operation	ACC.3~ACC.0 ← [m].7~[m].4 ACC.7~ACC.4 ← [m].3~[m].0
Affected flag(s)	None
SZ [m]	Skip if Data Memory is 0
Description	If the contents of the specified Data Memory is 0, the following instruction is skipped. As this requires the insertion of a dummy instruction while the next instruction is fetched, it is a two cycle instruction. If the result is not 0 the program proceeds with the following instruction.
Operation	Skip if [m]=0
Affected flag(s)	None
SZA [m]	Skip if Data Memory is 0 with data movement to ACC
Description	The contents of the specified Data Memory are copied to the Accumulator. If the value is zero, the following instruction is skipped. As this requires the insertion of a dummy instruction while the next instruction is fetched, it is a two cycle instruction. If the result is not 0 the program proceeds with the following instruction.
Operation	ACC ← [m] Skip if [m]=0
Affected flag(s)	None
SZ [m].i	Skip if bit i of Data Memory is 0
Description	If bit i of the specified Data Memory is 0, the following instruction is skipped. As this requires the insertion of a dummy instruction while the next instruction is fetched, it is a two cycle instruction. If the result is not 0, the program proceeds with the following instruction.
Operation	Skip if [m].i=0
Affected flag(s)	None
TABRD [m]	Read table (specific page or current page) to TBLH and Data Memory
Description	The low byte of the program code addressed by the table pointer (TBHP and TBLP or only TBLP if no TBHP) is moved to the specified Data Memory and the high byte moved to TBLH.
Operation	[m] ← program code (low byte) TBLH ← program code (high byte)
Affected flag(s)	None
TABRDL [m]	Read table (last page) to TBLH and Data Memory
Description	The low byte of the program code (last page) addressed by the table pointer (TBLP) is moved to the specified Data Memory and the high byte moved to TBLH.
Operation	[m] ← program code (low byte) TBLH ← program code (high byte)
Affected flag(s)	None
XOR A,[m]	Logical XOR Data Memory to ACC
Description	Data in the Accumulator and the specified Data Memory perform a bitwise logical XOR operation. The result is stored in the Accumulator.
Operation	ACC ← ACC ″XOR″ [m]
Affected flag(s)	Z

XORM A,[m]	Logical XOR ACC to Data Memory
Description	Data in the specified Data Memory and the Accumulator perform a bitwise logical XOR operation. The result is stored in the Data Memory.
Operation	[m] ← ACC ″XOR″ [m]
Affected flag(s)	Z

XOR A,x	Logical XOR immediate data to ACC
Description	Data in the Accumulator and the specified immediate data perform a bitwise logical XOR operation. The result is stored in the Accumulator.
Operation	ACC ← ACC ″XOR″ x
Affected flag(s)	Z

Package Information

Note that the package information provided here is for consultation purposes only. As this information may be updated at regular intervals users are reminded to consult the Holtek website for the latest version of the Package/Carton Information.

Additional supplementary information with regard to packaging is listed below. Click on the relevant section to be transferred to the relevant website page.

- Further Package Information (include Outline Dimensions, Product Tape and Reel Specifications)
- Packing Meterials Information
- Carton information

16-pin NSOP (150mil) Outline Dimensions

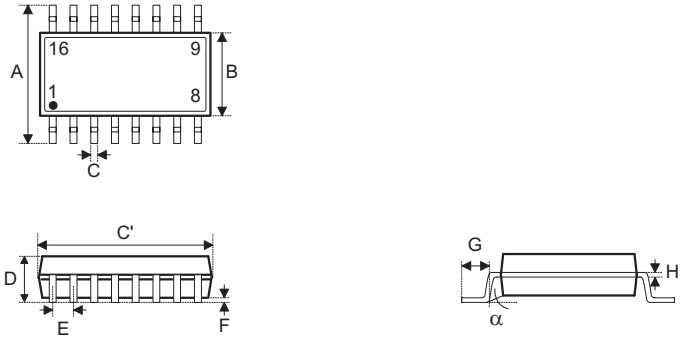

Symbol	Dimensions in inch		
	Min.	Nom.	Max.
A	—	0.236 BSC	—
B	—	0.154 BSC	—
C	0.012	—	0.020
C’	—	0.390 BSC	—
D	—	—	0.069
E	—	0.050 BSC	—
F	0.004	—	0.010
G	0.016	—	0.050
H	0.004	—	0.010
α	0°	—	8°

Symbol	Dimensions in mm		
	Min.	Nom.	Max.
A	—	6.0 BSC	—
B	—	3.9 BSC	—
C	0.31	—	0.51
C’	—	9.9 BSC	—
D	—	—	1.75
E	—	1.27 BSC	—
F	0.10	—	0.25
G	0.40	—	1.27
H	0.10	—	0.25
α	0°	—	8°

20-pin SOP (300mil) Outline Dimensions

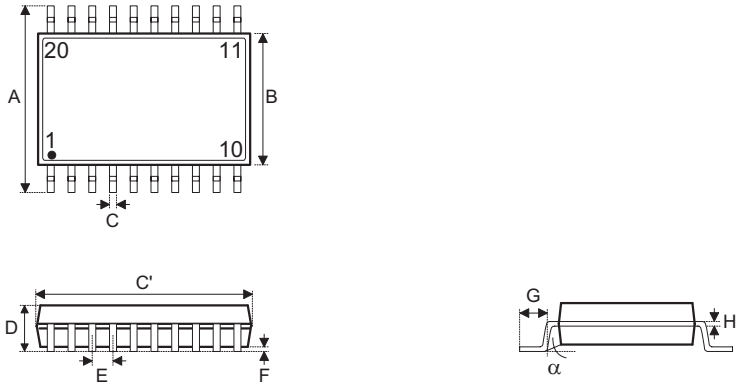

Symbol	Dimensions in inch		
	Min.	Nom.	Max.
A	—	0.406 BSC	—
B	—	0.295 BSC	—
C	0.012	—	0.020
C’	—	0.504 BSC	—
D	—	—	0.104
E	—	0.050 BSC	—
F	0.004	—	0.012
G	0.016	—	0.050
H	0.008	—	0.013
α	0°	—	8°

Symbol	Dimensions in mm		
	Min.	Nom.	Max.
A	—	10.30 BSC	—
B	—	7.50 BSC	—
C	0.31	—	0.51
C’	—	12.80 BSC	—
D	—	—	2.65
E	—	1.27 BSC	—
F	0.10	—	0.30
G	0.40	—	1.27
H	0.20	—	0.33
α	0°	—	8°

24-pin SOP(300mil) Outline Dimensions

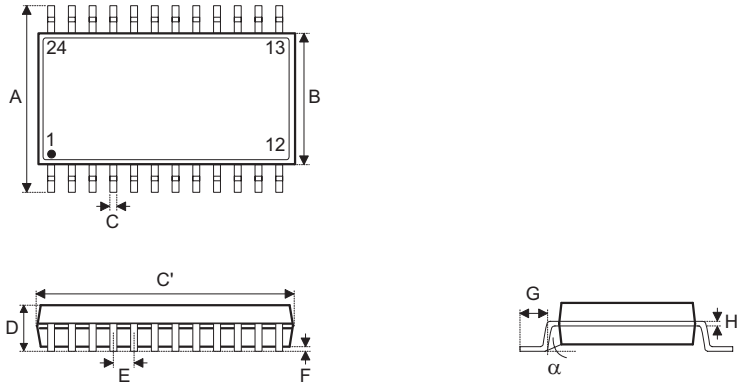

Symbol	Dimensions in inch		
	Min.	Nom.	Max.
A	—	0.406 BSC	—
B	—	0.295 BSC	—
C	0.012	—	0.020
C’	—	0.606 BSC	—
D	—	—	0.104
E	—	0.050 BSC	—
F	0.004	—	0.012
G	0.016	—	0.050
H	0.008	—	0.013
α	0°	—	8°

Symbol	Dimensions in mm		
	Min.	Nom.	Max.
A	—	10.30 BSC	—
B	—	7.5 BSC	—
C	0.31	—	0.51
C’	—	15.4 BSC	—
D	—	—	2.65
E	—	1.27 BSC	—
F	0.10	—	0.30
G	0.40	—	1.27
H	0.20	—	0.33
α	0°	—	8°

16-pin SSOP (150mil) Outline Dimensions

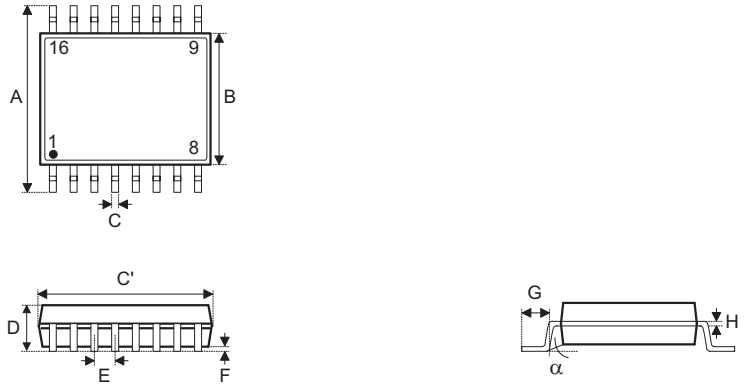

Symbol	Dimensions in inch		
	Min.	Nom.	Max.
A	—	0.236 BSC	—
B	—	0.154 BSC	—
C	0.008	—	0.012
C’	—	0.193 BSC	—
D	—	—	0.069
E	—	0.025 BSC	—
F	0.004	—	0.010
G	0.016	—	0.050
H	0.004	—	0.010
α	0°	—	8°

Symbol	Dimensions in mm		
	Min.	Nom.	Max.
A	—	6.000 BSC	—
B	—	3.900 BSC	—
C	0.20	—	0.30
C’	—	4.900 BSC	—
D	—	—	1.75
E	—	0.635 BSC	—
F	0.10	—	0.25
G	0.41	—	1.27
H	0.10	—	0.25
α	0°	—	8°

20-pin SSOP (150mil) Outline Dimensions

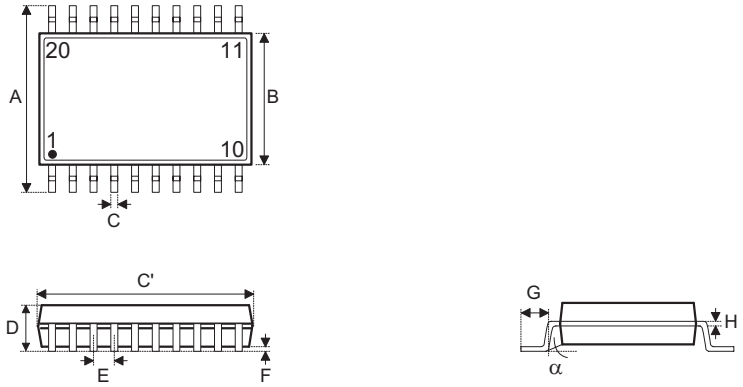

Symbol	Dimensions in inch		
	Min.	Nom.	Max.
A	—	0.236 BSC	—
B	—	0.154 BSC	—
C	0.008	—	0.012
C'	—	0.341 BSC	—
D	—	—	0.069
E	—	0.025 BSC	—
F	0.004	—	0.0098
G	0.016	—	0.05
H	0.004	—	0.01
α	0°	—	8°

Symbol	Dimensions in mm		
	Min.	Nom.	Max.
A	—	6.000 BSC	—
B	—	3.900 BSC	—
C	0.20	—	0.30
C'	—	8.660 BSC	—
D	—	—	1.75
E	—	0.635 BSC	—
F	0.10	—	0.25
G	0.41	—	1.27
H	0.10	—	0.25
α	0°	—	8°

24-pin SSOP (150mil) Outline Dimensions

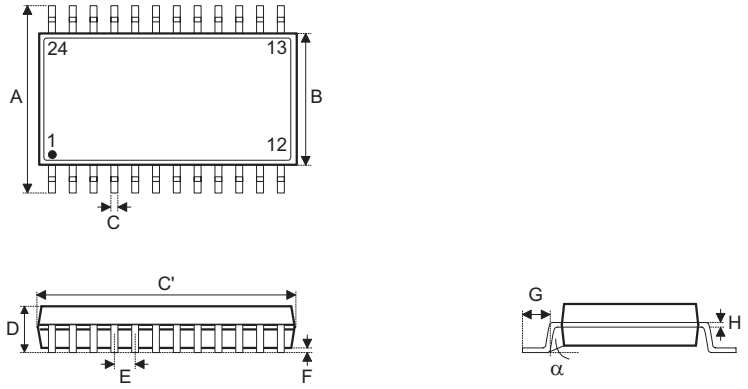

Symbol	Dimensions in inch		
	Min.	Nom.	Max.
A	—	0.236 BSC	—
B	—	0.154 BSC	—
C	0.008	—	0.012
C’	—	0.341 BSC	—
D	—	—	0.069
E	—	0.025 BSC	—
F	0.004	—	0.010
G	0.016	—	0.050
H	0.004	—	0.010
α	0°	—	8°

Symbol	Dimensions in mm		
	Min.	Nom.	Max.
A	—	6.000 BSC	—
B	—	3.900 BSC	—
C	0.20	—	0.30
C’	—	8.660 BSC	—
D	—	—	1.75
E	—	0.635 BSC	—
F	0.10	—	0.25
G	0.41	—	1.27
H	0.10	—	0.25
α	0°	—	8°

SAW Type 16-pin QFN (4mm×4mm×0.75mm) Outline Dimensions

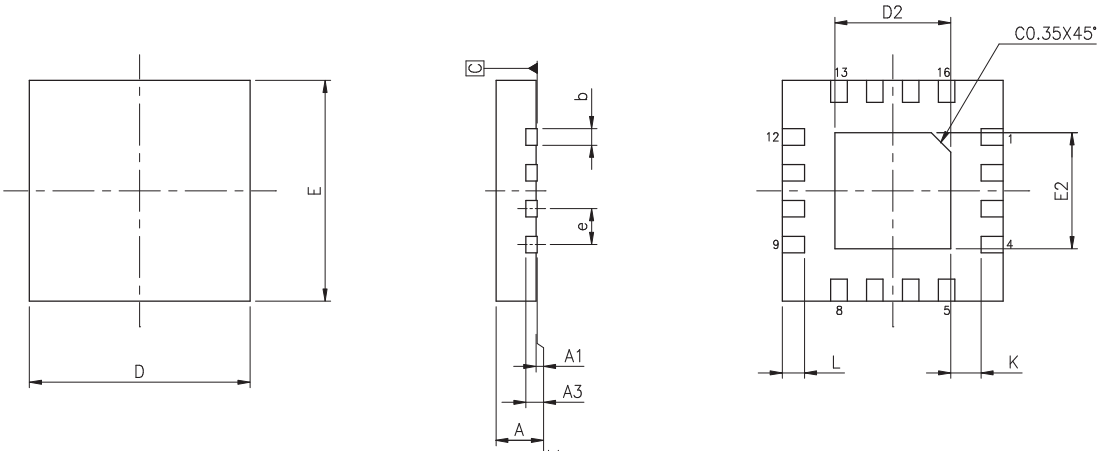

Symbol	Dimensions in inch		
	Min.	Nom.	Max.
A	0.028	0.030	0.031
A1	0.000	0.001	0.002
A3	—	0.008 BSC	—
b	0.010	0.012	0.014
D	—	0.157 BSC	—
E	—	0.157 BSC	—
e	—	0.026 BSC	—
D2	0.079	0.083	0.085
E2	0.079	0.083	0.085
L	0.014	0.016	0.018
K	0.008	—	—

Symbol	Dimensions in mm		
	Min.	Nom.	Max.
A	0.70	0.75	0.80
A1	0.00	0.02	0.05
A3	—	0.203 BSC	—
b	0.25	0.30	0.35
D	—	4.00 BSC	—
E	—	4.00 BSC	—
e	—	0.65 BSC	—
D2	2.00	2.10	2.15
E2	2.00	2.10	2.15
L	0.35	0.40	0.45
K	0.20	—	—

SAW Type 20-pin QFN (4mm×4mm×0.75mm) Outline Dimensions

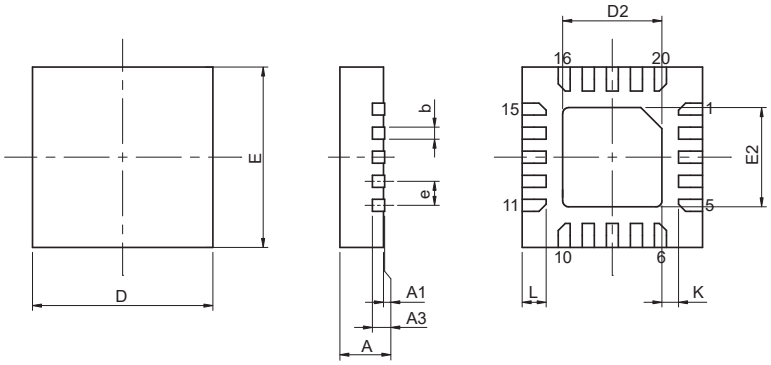

Symbol	Dimensions in inch		
	Min.	Nom.	Max.
A	0.028	0.030	0.031
A1	0.000	0.001	0.002
A3	—	0.008 BSC	—
b	0.008	0.010	0.012
D	—	0.157 BSC	—
E	—	0.157 BSC	—
e	—	0.020 BSC	—
D2	0.075	0.079	0.081
E2	0.075	0.079	0.081
L	0.012	0.016	0.020
K	0.008	—	—

Symbol	Dimensions in mm		
	Min.	Nom.	Max.
A	0.70	0.75	0.80
A1	0.00	0.02	0.05
A3	—	0.203 BSC	—
b	0.20	0.25	0.30
D	—	4.00 BSC	—
E	—	4.00 BSC	—
e	—	0.50 BSC	—
D2	1.90	2.00	2.05
E2	1.90	2.00	2.05
L	0.30	0.40	0.50
K	0.20	—	—

SAW Type 24-pin QFN (4mm×4mm, lead 0.325mm) Outline Dimensions

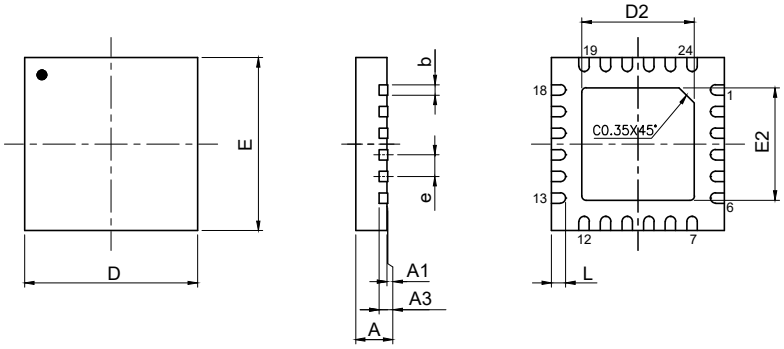

Symbol	Dimensions in inch		
	Min.	Nom.	Max.
A	0.028	0.030	0.031
A1	0.000	0.001	0.002
A3	—	0.008 BSC	—
b	0.007	0.010	0.012
D	—	0.157 BSC	—
E	—	0.157 BSC	—
e	—	0.020 BSC	—
D2	0.100	0.102	0.104
E2	0.100	0.102	0.104
L	0.011	0.013	0.015

Symbol	Dimensions in mm		
	Min.	Nom.	Max.
A	0.70	0.75	0.80
A1	0.00	0.02	0.05
A3	—	0.203 BSC	—
b	0.18	0.25	0.30
D	—	4.00 BSC	—
E	—	4.00 BSC	—
e	—	0.50 BSC	—
D2	2.55	2.60	2.65
E2	2.55	2.60	2.65
L	0.275	0.325	0.375

Copyright© 2021 by HOLTEK SEMICONDUCTOR INC.

The information appearing in this Data Sheet is believed to be accurate at the time of publication. However, Holtek assumes no responsibility arising from the use of the specifications described. The applications mentioned herein are used solely for the purpose of illustration and Holtek makes no warranty or representation that such applications will be suitable without further modification, nor recommends the use of its products for application that may present a risk to human life due to malfunction or otherwise. Holtek's products are not authorized for use as critical components in life support devices or systems. Holtek reserves the right to alter its products without prior notification. For the most up-to-date information, please visit our web site at http://www.holtek.com.