| Customer NO: | DOSIN-801-0433 | | | |
|---|---|---|---|---|
| REV | DESCRIPTION | DWN | DATE | APPROVEN |
| A | First issue | Mr.chen | 2017/11/26 | John kine |
| B | | | | |

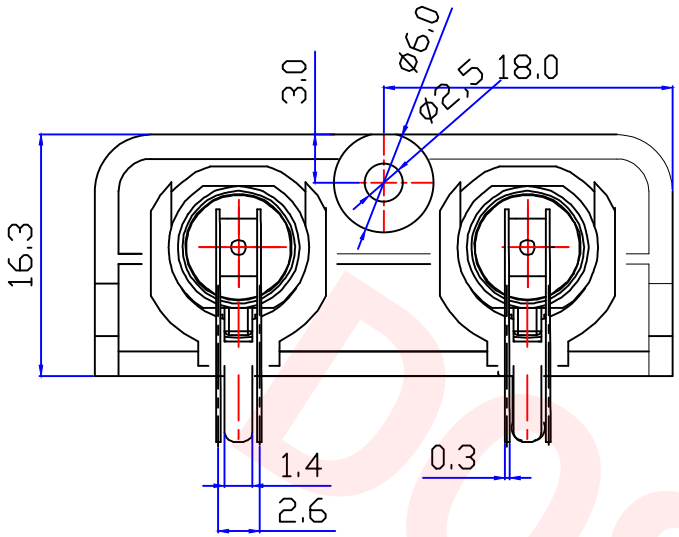


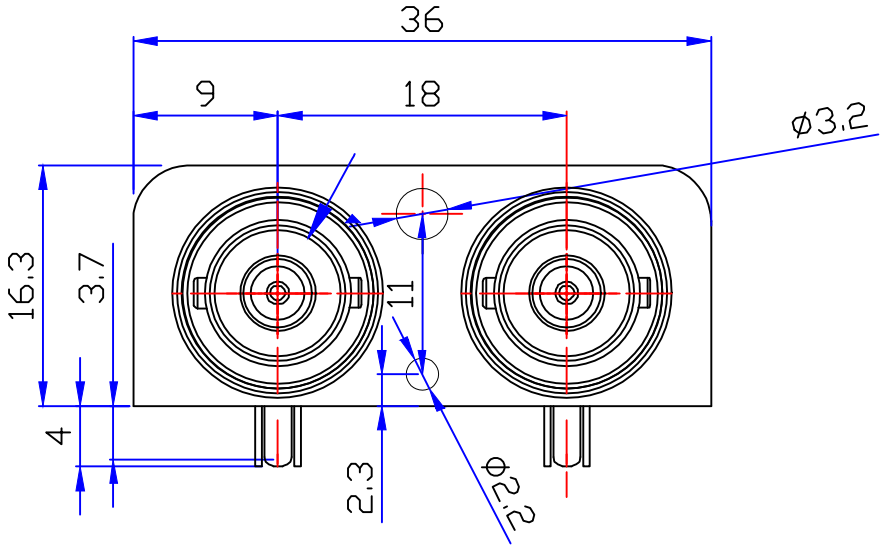


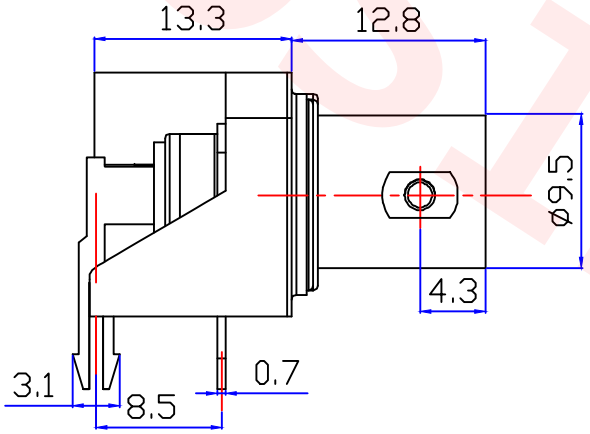


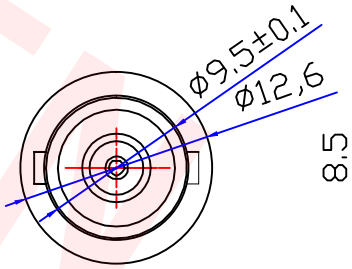


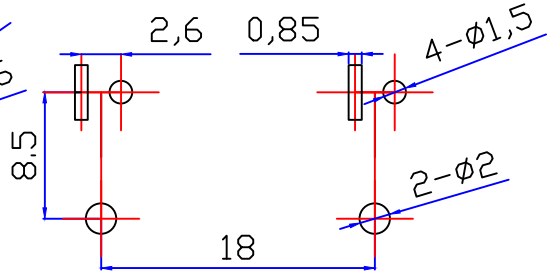


PCB

# Specifications:

IMPEDANCE: 50 Ohms
Frequency range:0~3GHZ
VSWR:1.5MAX
Working voltage:500V rms @ sea level
Insulation resistance:5000 Ohms min
Temperature range:-55℃ TO +155℃
Relative temperature:≤95%(40° C±2° C)

| NO | Component Number | Material | Finish | QTY |
|---|---|---|---|---|
| 1 | BODY | Zinc | NICKEL | 2 |
| 2 | SOLDEI COLUMN | Iron | NICKEL | 2 |
| 3 | IRON PLATES | Iron | NICKEL | 1 |
| 4 | PIN | phosphor copper | GOLD | 4 |
| 5 | INSULATOI | POM | White | 2 |
| 6 | PANEL | PBT/ABS | Black | 1 |
| 7 | | | | |
| 8 | | | | |
| 9 | | | | |
| 10 | | | | |

NOTE:

DRAWN Zelin.chen
CHECKED
APPROVALS John

| | | |
|---|---|---|
| Tolerance | X. | ±0.15 |
| | X.X | ±0.10 |
| | X.XX | ±0.05 |
| | Angular | ±5° |
| View | | |
| UNIT | MM | |
| SCALE | 1:1 | |


DOSIN RF CONNECTOR Dosin Industrial (H.K)Co.Ltd
东莞市德索五金电子制品有限公司
Dosin Hardware Electronics Co.,Ltd
E-mail:dosin2005@163.com
dosin2005@dosin-china.com
Web:http://www.dosinconn.com
TEL:(0086)769-81153906
FAX:(0086)769-81875836


Name: BNC Jack 1*2 Port 90° PCB Mount

| SIZE | Product NO. | REV |
|---|---|---|
| A | DOSIN-801-0433 | A |

| DateTime | CAD FILE | SHEET: 1 OF 1 |
|---|---|---|
| 2017/11/26 | H/company drawings/BD | |