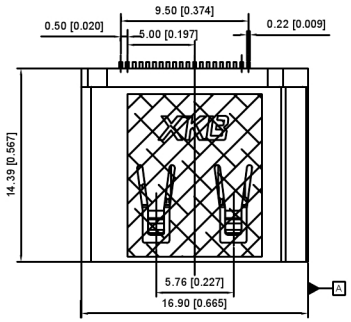

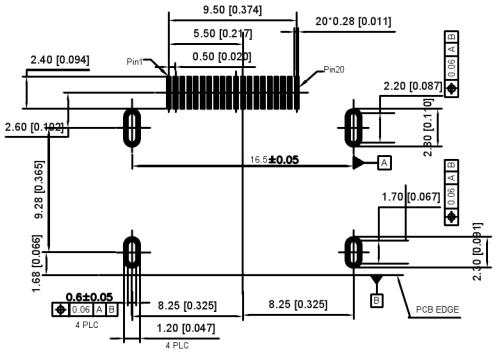

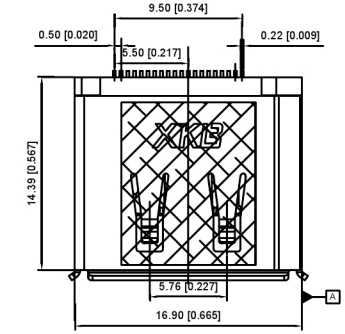

S:Scrolls

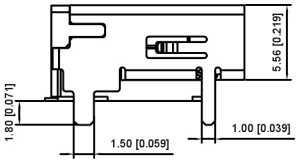

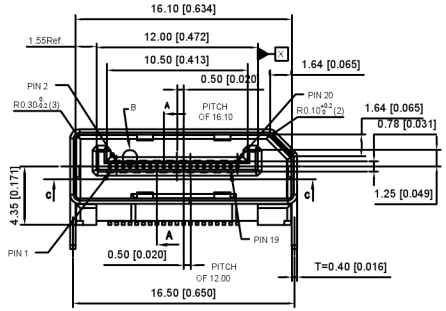

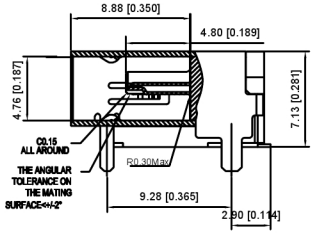

SECT-A-A

NOTES:

1.MATERIAL:

HOUSING: THERMOPLASTIC HIGH TEMP WITH 30% GF (PA10T R630NH / LCP E130I , E471I OR 6807LHF),UL94V-0.

CONTACT: C2680R-EH T=0.20mm

SHELL: C2680R-H T=0.40mm

MYLAR: KAPTON TAPE T=0.06mm

2. PLATING:

CONTACT: 10u" MIN. GOLD PLATING ON CONTACT AREA, GOLD FLASH PLATING OVER ALL

SHELL: 50~90u" NICKEL PLATING OVERALL

3. SOLDERTAIL COPLANARITY 0.10MAX.

4.PART NO. DESCRIPTION:

CAR02 - 20 1 E N X X

① ② ③ ④ ⑤ ⑥ ⑦

① DISPLAY PORT

② POS NO.: 20:20 POS.

③ HOUSING COLOR 1:BLACK

④ CONTACT PLATING E:Au30u"+MATTE TIN

⑤ SHELL PLATING: N=NICKEL PLATING

⑥ PACKAGE 2=TAPE REEL 5=TAPE REEL+MYLAR

⑦ Interface type S:Scrolls F:Flat

F: Flat

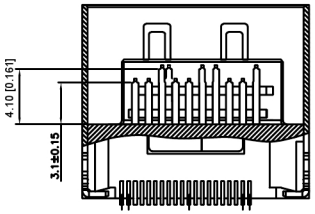

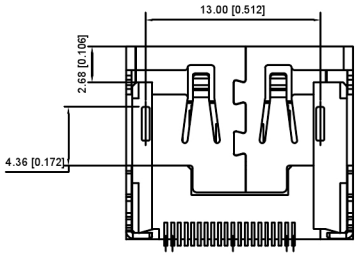

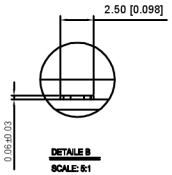

DETAILE B
SCALE: 5:1

广东星坤科技股份有限公司
文 件 工 程 章

MARK	DESCRIPTION	DATE	REVISED	APPROVED
△X				
△X				
△X				

REVISIONS

UNSPECIFIED TOLERANCES	
ANGLAR	±5°
L≤ 4	±0.2
4<L≤ 16	±0.3
16<L≤ 63	±0.4
L> 63	±0.5

www.helloxkb.com www.helloxkb.cn www.xk-dg.cn

XKB INDUSTRIAL PRECISION CO.,LIMITED

DSND		SCALE: N/A	MODEL TYPE: DP CONNECTOR
DWN		VIEW:	PART NO.:
CHKD		UNIT: mm/in	DWG NO.: CAR02-201ENXX
APPD		SIZE: A4	

WEIGHT	SHEET	REVISION
	1/1	A0