RoHS

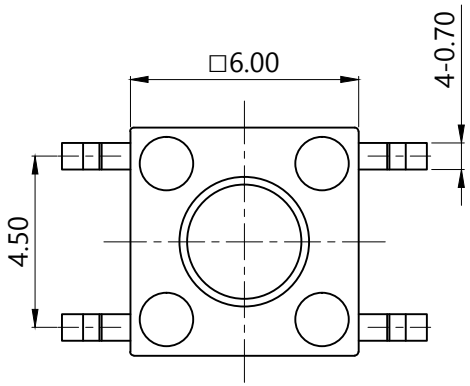

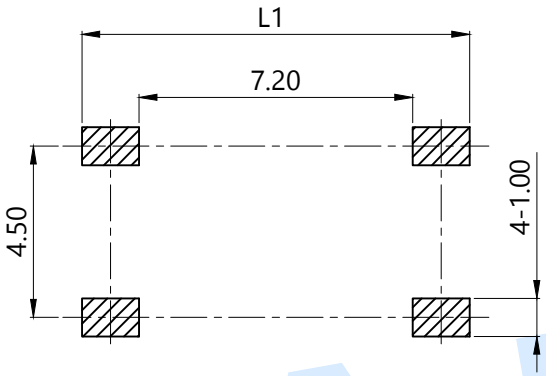

PCB Layout(Pattern side)

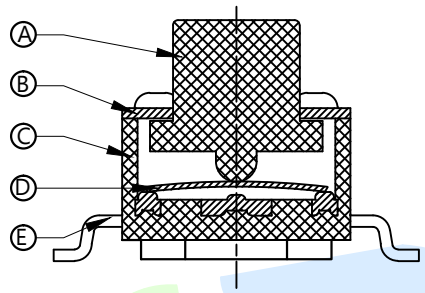

OPERATING FORCE	
CODE	VIGOR
B1	120±30gf
B2	180±30gf
B3	250±30gf

FOOT PITCH		
CODE	L	L1
C1	8.0	10
C2	8.5	11
C3	9.0	11
C4	9.5	12

SHRAPNEL	
CODE	MATERIAL/QTY
D1	C5210/1PCS
D2	SUS/1PCS

TOTAL HEIGHT						
CODE	H	ø		CODE	H	ø
A1	4.3	3.5		A14	11	3.0
A2	4.5	3.5		A145	11.5	3.0
A3	5.0	3.5		A15	12	3.0
A4	5.5	3.5		A155	12.5	3.0
A5	6.0	3.5		A16	13	3.0
A6	6.5	3.3		A165	13.5	3.0
A7	7.0	3.3		A17	14	3.0
A8	7.5	3.3		A18	15	3.0
A9	8.0	3.3		A19	16	3.0
A10	8.5	3.3		A20	17	3.0
A11	9.0	3.1		A21	18	2.9
A12	9.5	3.1		A22	19	2.9
A13	10	3.1		A23	20	2.9
A135	10.5	3.0		A24	21	2.9

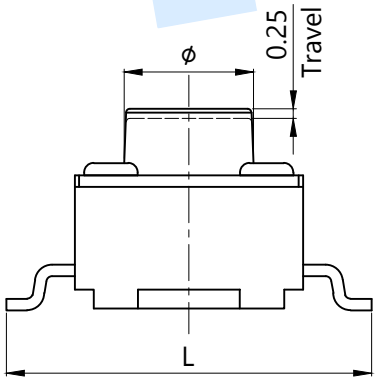

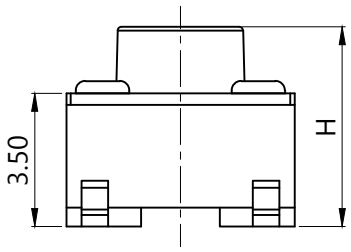

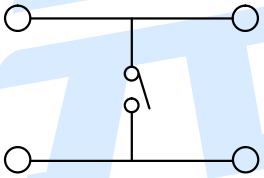

Circuit Diagram

NO.	Name	Number	Qty	Materil	Remarks
Ⓔ	Terminal		4	Brass	Silvering
Ⓓ	Reed		1	SUS	Silver covered
Ⓒ	Base		1	PPA	Black
Ⓑ	Cover		1	SPCC	Plating Cu Sn
Ⓐ	Keystoke		1	PPA	Black

Yuandi Electronics Co,Ltd

angle	±2°	design	date	name	TACT SWITCHS
10~30	±0.30	Review	date		
5~10	±0.20	Approved	date	model	TS-1095S-A□B□-C□D□
~ 5	±0.10	Drawing number:			
modify / Review / Approved	Tolerance not specified	Proportion 1:1	unit mm	gape number	A4