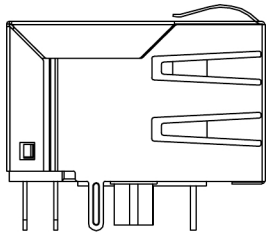

LEFT SIDE VIEW

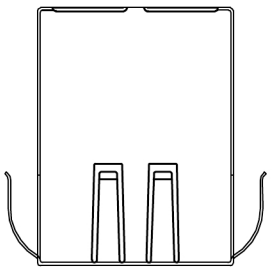

TOP VIEW

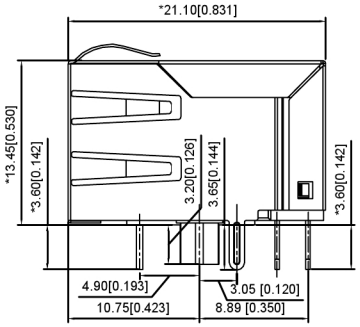

RIGHT SIDE VIEW

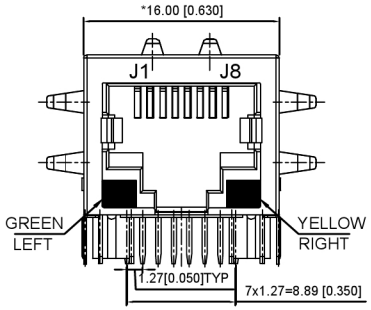

FRONT VIEW

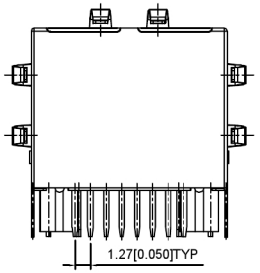

BACK VIEW

ELECTRICAL 电气:

1.Turn ratio 匝数比:1~2:J1~J2=1CT:1CT(±2%)
3~6:J3~J6=1CT:1CT(±2%)
2.OCL 已占搭载量:350uH Min.at 100KHz 100mV 8mA DC.
3.Insertion Loss 插入损耗: -1.0 dB Max 1~100MHz
4.Return loss 回程损耗: -20dB Min 1~10MHz
-16dB Min 10~30MHz
-12dB Min 30~60MHz
-10dB Min 60~80MHz
5.Cross talk 声道串扰: -40dB Min 1~30MHz;
-35dB Min 30~60MHz;
-30dB Min 60~100MHz;
6.CMR 共模抑制: -350dB Min 1~100MHz;
7.Hi-Pot 耐压测试:1500V AC & 2250V DC 6S
1mA PRI TO SEC

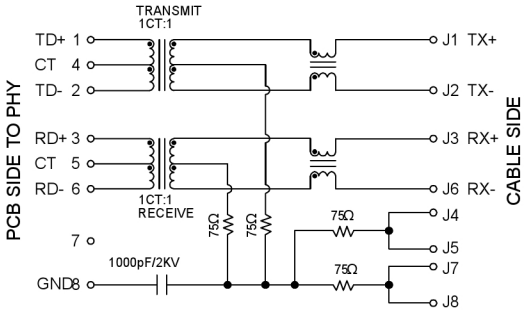

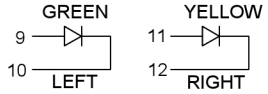

LED Specification

Standard LED Color	LED Wavelength	Foward(A)	Foward(V)
Green	568nm	20mA	1.85 -2.45V
Yellow	585nm	20mA	1.7 -2.2V

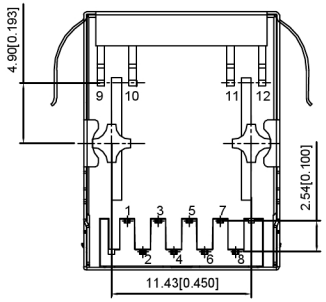

BOTTOM VIEW

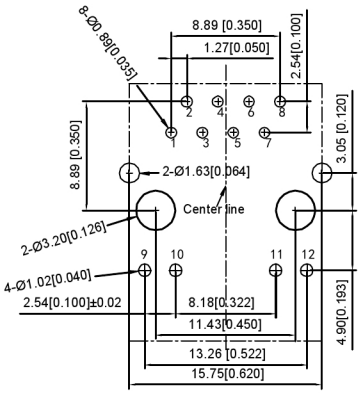

RECOMMENDED PCB LAYOUT
VIEWED FROM COMPONENT SIDE

XKB Connecitity

MATERIAL 材料:
HOUSING 外壳: PBT,UL94V-0,BLACK.
TERMINALS BRACKET 端子支架: PBT,UL94V-0,BLACK.
SHIELD 保护物: C2680,T=0.20MM,NICKEL PLATING ON ALL AREA.
TERMINAL 端子: PHOSPHOR BRONZE C5210,T=0.35MM,
GOLD PLATING ON CONTACT AREA.

MECHANICAL 机械:
DURABILITY 耐用性: 750 CYCLES MIN.
MATING FORCE 配合力: 23N MAX.
OPERATING TEMPERATURE 工作温度: -40°C~+85°C.
STORAGE TEMPERATURE 储存温度: -40°C~+85°C.
ALL CRITICAL DIMENSIONS WITH "*"

广东星坤科技股份有限公司
生效
文件工程章

MARK	DESCRIPTION	DATE	REVISED	APPROVED
ΔX				
ΔX				
ΔX				

REVISIONS

ANGLAR	±5°
L≤ 4	±0.2
4<L≤ 16	±0.3
16<L≤ 63	±0.4
L> 63	±0.5

UNSPECIFIED TOLERANCES

www.helloxkb.com www.helloxkb.cn www.xk-dg.cn

XKB INDUSTRIAL PRECISION CO.,LIMITED

DSND		SCALE: N/A	MODEL TYPE: RJ JACK
DWN		VIEW:	PART NO.:
CHKD		UNIT: mm/in	DWG NO.: X01AB002EB2AD
APPD		SIZE: A4	WEIGHT / SHEET 1/1 / REVISIOI A0