RoHS

Parts Drawing

REVISIONS				
SYM	ECN No.	MODIRICATION	DATE	ISSUED

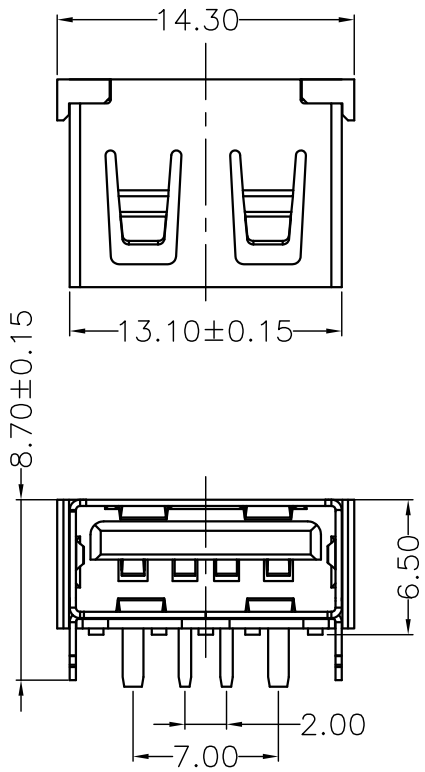

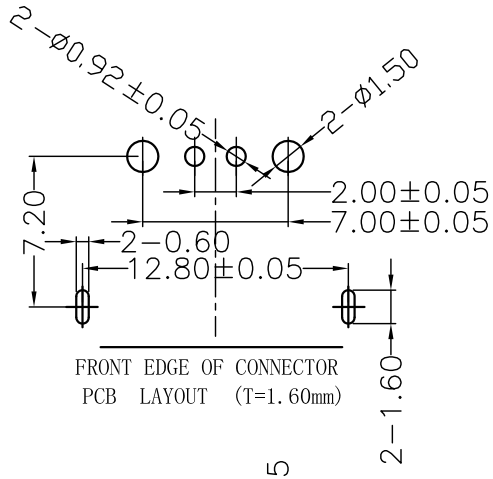

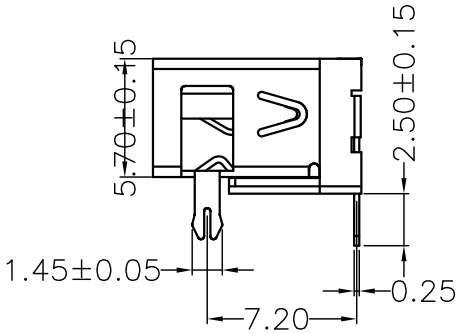

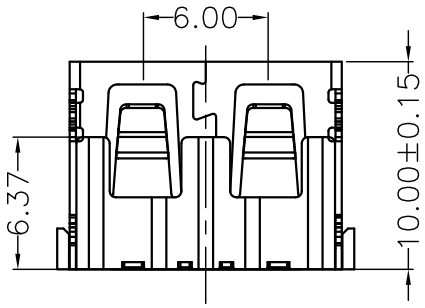

Note:

1.Material:
- 1.1,Housing: High temperature thermoplastic with/black g.f,UL94v-0
- 1.2,Contact: copper alloy,t=0.25mm
- 1.3,Shell: copper/Ferroalloy alloy,t=0.30mm

2.Specification:
- 2.1,Current rating:5A Max.
- 2.2,Dielectric withstanding voltage: 100 V(ac) for 1 min.
- 2.3,Contact resistance: 30 mΩ Max.
- 2.4,Insulation resistance: 100 MΩ Min.
- 2.5,Total mating force: 3.57 Kgf Max.
- 2.6,Total unmating force: 1.0 Kgf Min.

3.Finish:
- 3.1,Contact: Piated Golg in Mating Area: Tin On Solder Talls
  Shell: Nickel Plating

4.Environmental:
- 4.1,Temperature range: -55°C~85°C

PART ON:

918-15XAXXXXDXXX

- 电镀规格；11,镀金1u″ 13,镀金3u″ 15,镀金15u″ 16,镀金30u″
- 端子材质；1,青铜 2,磷铜
- 端子规格；D,90度 Y,180度 S,SMT贴板
- 塑胶型态；2,6.5有耳 7,6.5无耳
- 塑胶颜色；01,白色 02,黑色 03,本色
- 塑胶材质；1,PBT 2,LCP 3,PA9T 4,PPA 5,PA6T
- 对插方向；A,正向 B,反向
- 外壳材质；1,铁壳 2,铜壳
- 插口类型；5,有边 6,无边
- 外壳脚型；1,前两脚 2,后两脚 3,四脚 4,无脚
- 类别：E款

DRAWN	深圳市精拓金电子有限公司					
CHECKED	TITLE AF10.0D款大电流前两脚无边		PART NO. SEE PART ON			
APPROVED	铜壳PA9T橙色172C/DIP15U"-H6.5		919-162A3112D10700			
3rd ANGLE PROJECTION	UNIT mm	TOLERANCE .XXX±.10, .XX±.25, .X±.38, ANG±5°	SCALE 1:1	SHEET 1 OF 1	SIZE A4	REV. X1