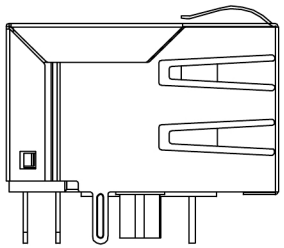

LEFT SIDE VIEW

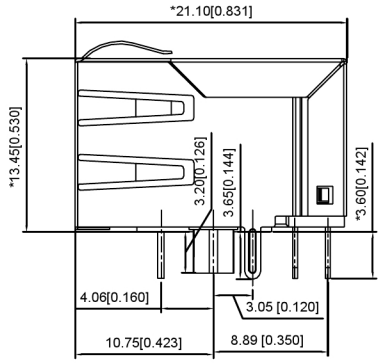

RIGHT SIDE VIEW

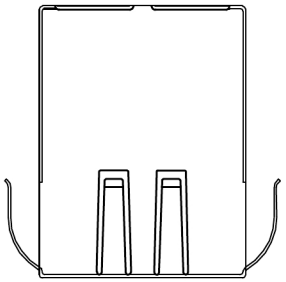

TOP VIEW

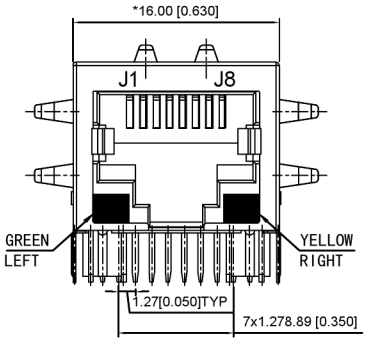

FRONT VIEW

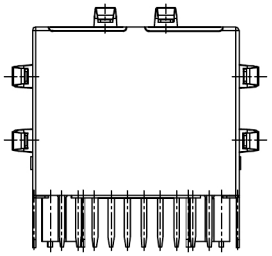

BACK VIEW

XKB Connecitity

Electrical 电气:

1.Turn ratio 匝数比:1~2:J1~J2=1CT:1CT(±2%).
3~4:J3~J6=1CT:1CT(±2%)
7~8:J4~J5=1CT:1CT(±2%)
9~10:J7~J8=1CT:1CT(±2%)

2.OCL:180uH Min.at 100KHz 100mV

3.Insertion Loss 插入损耗:-1.0 dB Max 1~125MHz.

4.Return loss 回程损耗:-20dB Min 1~40MHz
-20+15LOG10(f/40MHz)Min 40~200MHz

5.Cross talk 声道串扰:-30dB Min 30~200MHz;

6.CMR 共模抑制: -30dB Min 30~200MHz;

7.Hi-Pot 耐压测试: 2250V DC VRMS MIN AT 60 SECONDS

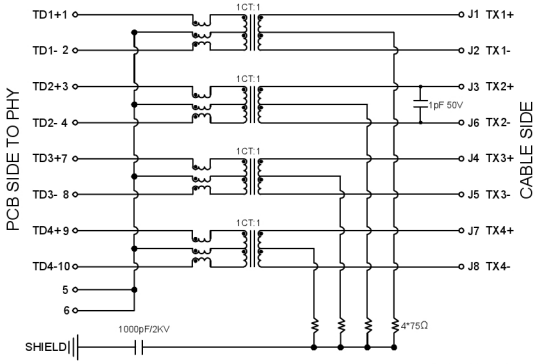

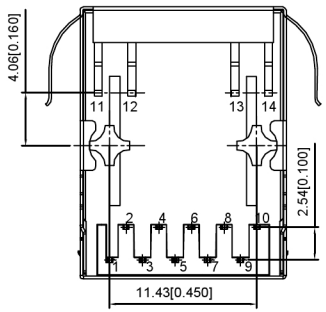

BOTTOM VIEW

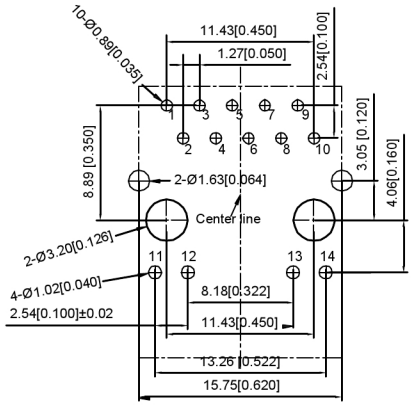

RECOMMENDED PCB LAYOUT
VIEWED FROM COMPONENT SIDE

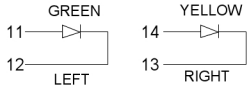

LED Specification

Standard LED Color	LED Wavelength	Foward(A)	Foward(V)
Green	568nm	20mA	1.85-2.45V
Yellow	585nm	20mA	1.7-2.2V

XKB Connecitity

MATERIAL 材料:
HOUSING 外壳: PBT,UL94V-0,BLACK.
TERMINALS BRACKET 端子支架: PBT,UL94V-0,BLACK.
SHIELD 保护物: C2680,T=0.20MM,NICKEL PLATING ON ALL AREA.
TERMINAL 端子: PHOSPHOR BRONZE C5210,T=0.35MM,
GOLD PLATING ON CONTACT AREA.

MECHANICAL 机械:
DURABILITY 耐用性: 750 CYCLES MIN.
MATING FORCE 配合力: 23N MAX.
OPERATING TEMPERATURE 工作温度: -40°C~+85°C.
STORAGE TEMPERATURE 储存温度: -40°C~+85°C.
ALL CRITICAL DIMENSIONS WITH "*"

广东星坤科技股份有限公司
生效日期
文件工程章

MARK	DESCRIPTION	DATE	REVISED	APPROVED
Δx				
Δx				
Δx				

REVISIONS

UNSPECIFIED TOLERANCES	
ANGLAR	±5°
L≤ 4	±0.2
4<L≤ 16	±0.3
16<L≤ 63	±0.4
L> 63	±0.5

XKB INDUSTRIAL PRECISION CO.,LIMITED

www.helloxkb.com www.helloxkb.cn www.xk-dg.cn

DSND		SCALE: N/A	MODEL TYPE: RJ JACK
DWN		VIEW:	PART NO.:
CHKD		UNIT: mm/in	DWG NO.: X01AQ285DA2ADA2
APPD		SIZE: A4	WEIGHT / SHEET 1/1 / REVISION A0