MARK	PLACES	ZONE	ECN	DATE

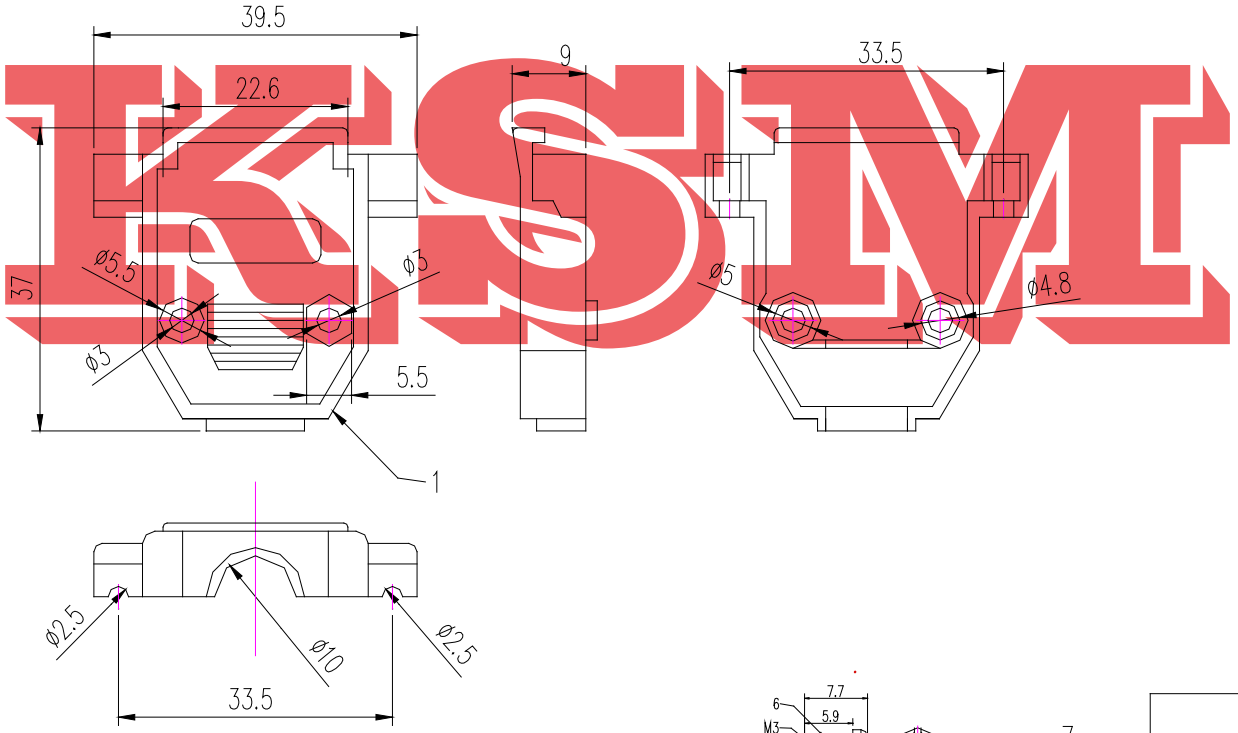

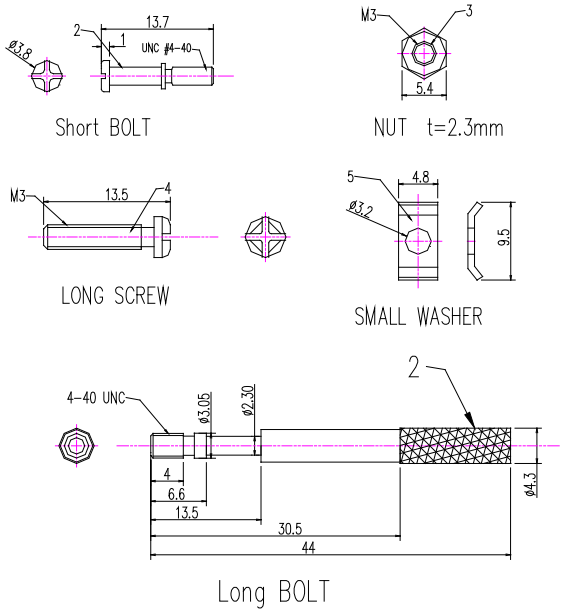

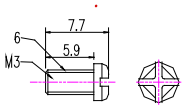

SHORT SCREW

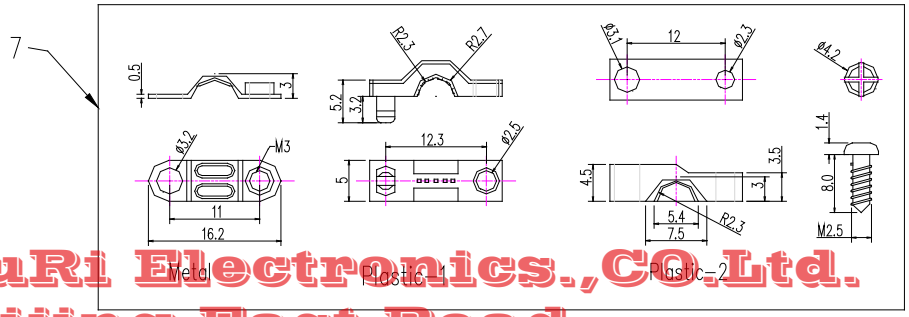

BOM LIST				
ITEM		PART NAME	Q"ty	NOTES
1		PLASTIC HOOD	2	ABS
2	2.1	LONG BOLT	2	#4-40
	2.2	SHORT BOLT	2	#4-40
3		NUT	2	M3
4		LONG SCREW	2	M3
5		SMALL WASHER	2	
6		SHORT SCREW	2	M3
7	7.1	METAL WASHER	2	M3
	7.2	PLASTIC-1 WASHER	2	ABS
	7.3	PLASTIC-2 WASHER	2	ABS

Shanghai ZhouRi Electronics.,CO.Ltd.
Add:No.668 Beijing East Road
Tel:86-21-51571121 53085565
Fax:86-21-51571120
Http:www.ksmchina.com
E-mail:zhouri1101@163.com

UNLESS OTHERWISE SPECIFIED			15 D-SUB			上海洲日电子有限公司 Shanghai ZhuoRi Electronics CO.,LTD.		
DIMENSION	TOLERANCE							
	DECIMAL	ANGLE						
X.X	±0.3	±1°						
X.XX	±0.2	±0.5°	MODEL NO.	DB-Hood	MATERIAL		FINISH	
X.XXX	±0.1							
	±0.05		DWG. NO.	ZR-Hood-002	COLOR		QUANTITY	
DESIGNED			Item NO.					
CHECKED			REV.	A/0	SCALE	1:1	UNIT mm	SIZE A4
APPROVED			THE THIRD ANGLE PROJECTION				SHEET OF PAGES	