FAIRCHILD™

Is Now Part of

ON Semiconductor®

To learn more about ON Semiconductor, please visit our website at
www.onsemi.com

Please note: As part of the Fairchild Semiconductor integration, some of the Fairchild orderable part numbers will need to change in order to meet ON Semiconductor's system requirements. Since the ON Semiconductor product management systems do not have the ability to manage part nomenclature that utilizes an underscore (_), the underscore (_) in the Fairchild part numbers will be changed to a dash (-). This document may contain device numbers with an underscore (_). Please check the ON Semiconductor website to verify the updated device numbers. The most current and up-to-date ordering information can be found at www.onsemi.com. Please email any questions regarding the system integration to Fairchild_questions@onsemi.com.

ON Semiconductor and the ON Semiconductor logo are trademarks of Semiconductor Components Industries, LLC dba ON Semiconductor or its subsidiaries in the United States and/or other countries. ON Semiconductor owns the rights to a number of patents, trademarks, copyrights, trade secrets, and other intellectual property. A listing of ON Semiconductor's product/patent coverage may be accessed at www.onsemi.com/site/pdf/Patent-Marking.pdf. ON Semiconductor reserves the right to make changes without further notice to any products herein. ON Semiconductor makes no warranty, representation or guarantee regarding the suitability of its products for any particular purpose, nor does ON Semiconductor assume any liability arising out of the application or use of any product or circuit, and specifically disclaims any and all liability, including without limitation special, consequential or incidental damages. Buyer is responsible for its products and applications using ON Semiconductor products, including compliance with all laws, regulations and safety requirements or standards, regardless of any support or applications information provided by ON Semiconductor. "Typical" parameters which may be provided in ON Semiconductor data sheets and/or specifications can and do vary in different applications and actual performance may vary over time. All operating parameters, including "Typicals" must be validated for each customer application by customer's technical experts. ON Semiconductor does not convey any license under its patent rights nor the rights of others. ON Semiconductor products are not designed, intended, or authorized for use as a critical component in life support systems or any FDA Class 3 medical devices or medical devices with a same or similar classification in a foreign jurisdiction or any devices intended for implantation in the human body. Should Buyer purchase or use ON Semiconductor products for any such unintended or unauthorized application, Buyer shall indemnify and hold ON Semiconductor and its officers, employees, subsidiaries, affiliates, and distributors harmless against all claims, costs, damages, and expenses, and reasonable attorney fees arising out of, directly or indirectly, any claim of personal injury or death associated with such unintended or unauthorized use, even if such claim alleges that ON Semiconductor was negligent regarding the design or manufacture of the part. ON Semiconductor is an Equal Opportunity/Affirmative Action Employer. This literature is subject to all applicable copyright laws and is not for resale in any manner.

FAIRCHILD SEMICONDUCTOR®

October 2013

FDB070AN06A0

N-Channel PowerTrench® MOSFET

60 V, 80 A, 7 mΩ

Features

- $R_{DS(on)}$ = 6.1 mΩ (Typ.) @ V_{GS} = 10 V, I_D = 80 A
- $Q_{g(tot)}$ = 51 nC (Typ.) @ V_{GS} = 10 V
- Low Miller Charge
- Low Q_{rr} Body Diode
- UIS Capability (Single Pulse and Repetitive Pulse)

Formerly developmental type 82567

Applications

- Synchronous Rectification for ATX / Server / Telecom PSU
- Battery Protection Circuit
- Motor Drives and Uninterruptible Power Supplies

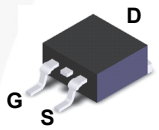

D^2-PAK

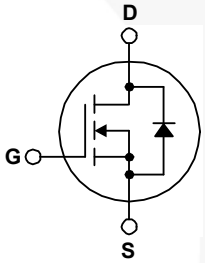

MOSFET Maximum Ratings T_C = 25°C unless otherwise noted

Symbol	Parameter	FDB070AN06A0	Unit
V_{DSS}	Drain to Source Voltage	60	V
V_{GS}	Gate to Source Voltage	±20	V
I_D	Drain Current Continuous (T_C < 97°C, V_{GS} = 10V)	80	A
	Continuous (T_A = 25°C, V_{GS} = 10V, $R_{\theta JA}$ = 43°C/W)	15	A
	Pulsed	Figure 4	A
E_{AS}	Single Pulse Avalanche Energy (Note 1)	190	mJ
P_D	Power dissipation	175	W
	Derate above 25°C	1.17	W/°C
T_J, T_{STG}	Operating and Storage Temperature	-55 to 175	°C

Thermal Characteristics

$R_{\theta JC}$	Thermal Resistance Junction to Case, Max.	0.86	°C/W
$R_{\theta JA}$	Thermal Resistance Junction to Ambient, Max. (Note 2)	62	°C/W
$R_{\theta JA}$	Thermal Resistance Junction to Ambient, Max., 1in² copper pad area	43	°C/W

©2003 Fairchild Semiconductor Corporation

Package Marking and Ordering Information

Device Marking	Device	Package	Reel Size	Tape Width	Quantity
FDB070AN06A0	FDB070AN06A0	D^2-PAK	330 mm	24 mm	800 units

Electrical Characteristics T_C = 25°C unless otherwise noted

Symbol	Parameter	Test Conditions	Min	Typ	Max	Unit
Off Characteristics						
B_{VDSS}	Drain to Source Breakdown Voltage	I_D = 250μA, V_{GS} = 0V	60	-	-	V
I_{DSS}	Zero Gate Voltage Drain Current	V_{DS} = 50V, V_{GS} = 0V	-	-	1	μA
		V_{DS} = 50V, V_{GS} = 0V, T_C = 150°C	-	-	250	
I_{GSS}	Gate to Source Leakage Current	V_{GS} = ±20V	-	-	±100	nA
On Characteristics						
$V_{GS(TH)}$	Gate to Source Threshold Voltage	V_{GS} = V_{DS}, I_D = 250μA	2	-	4	V
$r_{DS(ON)}$	Drain to Source On Resistance	I_D = 80A, V_{GS} = 10V	-	0.0061	0.007	Ω
		I_D = 80A, V_{GS} = 10V, T_J = 175°C	-	0.0127	0.015	
Dynamic Characteristics						
C_{ISS}	Input Capacitance	V_{DS} = 25V, V_{GS} = 0V, f = 1MHz	-	3000	-	pF
C_{OSS}	Output Capacitance		-	510	-	pF
C_{RSS}	Reverse Transfer Capacitance		-	230	-	pF
$Q_{g(TOT)}$	Total Gate Charge at 10V	V_{GS} = 0V to 10V; V_{DD} = 30V, I_D = 80A, I_g = 1.0mA		51	66	nC
$Q_{g(TH)}$	Threshold Gate Charge	V_{GS} = 0V to 2V	-	5.4	7	nC
Q_{gs}	Gate to Source Gate Charge		-	17	-	nC
Q_{gs2}	Gate Charge Threshold to Plateau		-	11.6	-	nC
Q_{gd}	Gate to Drain "Miller" Charge		-	16	-	nC
Switching Characteristics (V_{GS} = 10V)						
t_{ON}	Turn-On Time	V_{DD} = 30V, I_D = 80A, V_{GS} = 10V, R_{GS} = 5.6Ω	-	-	256	ns
$t_{d(ON)}$	Turn-On Delay Time		-	12	-	ns
t_r	Rise Time		-	159	-	ns
$t_{d(OFF)}$	Turn-Off Delay Time		-	27	-	ns
t_f	Fall Time		-	35	-	ns
t_{OFF}	Turn-Off Time		-	-	93	ns
Drain-Source Diode Characteristics						
V_{SD}	Source to Drain Diode Voltage	I_{SD} = 80A	-	-	1.25	V
		I_{SD} = 40A	-	-	1.0	V
t_{rr}	Reverse Recovery Time	I_{SD} = 75A, dI_{SD}/dt = 100A/μs	-	-	34	ns
Q_{RR}	Reverse Recovered Charge	I_{SD} = 75A, dI_{SD}/dt = 100A/μs	-	-	35	nC

Notes:
1: Starting T_J = 25°C, L = 93μH, I_{AS} = 64A.
2: Pulse width = 100s.

Typical Characteristics T_C = 25°C unless otherwise noted

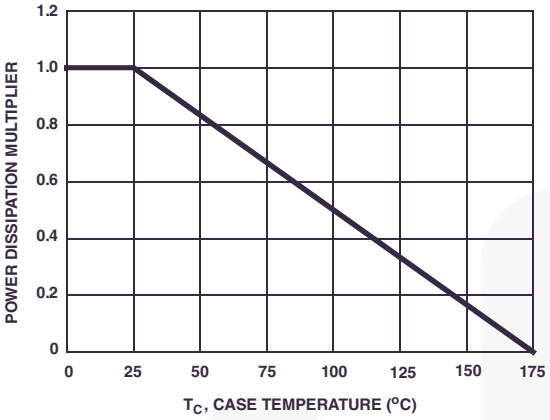

Figure 1. Normalized Power Dissipation vs Ambient Temperature

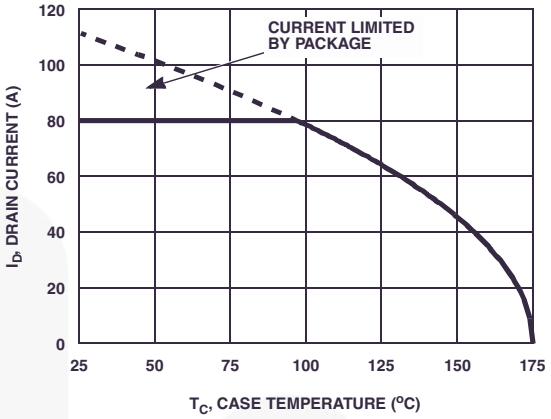

Figure 2. Maximum Continuous Drain Current vs Case Temperature

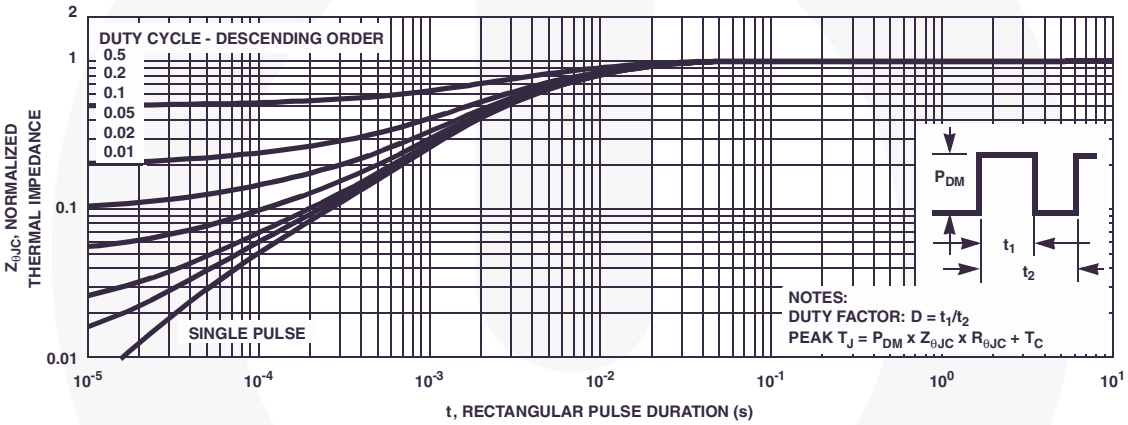

Figure 3. Normalized Maximum Transient Thermal Impedance

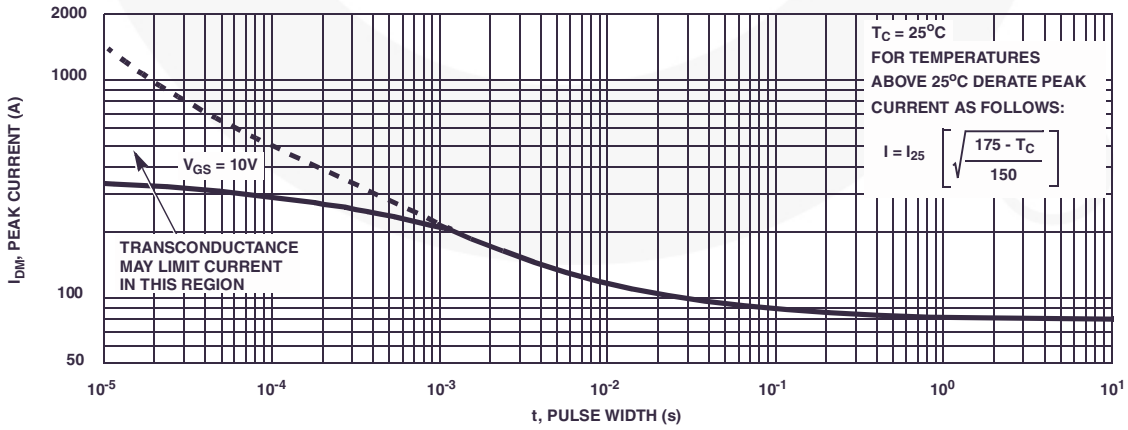

Figure 4. Peak Current Capability

Typical Characteristics T_C = 25°C unless otherwise noted

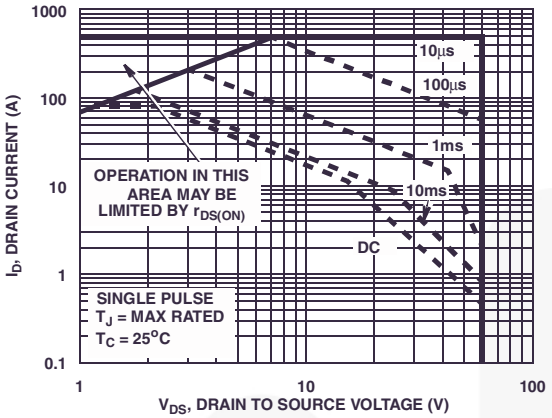

Figure 5. Forward Bias Safe Operating Area

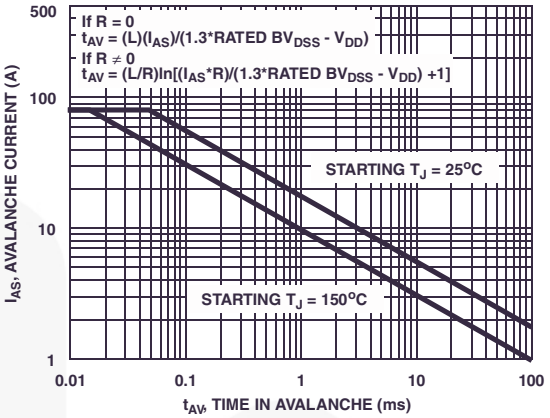

NOTE: Refer to Fairchild Application Notes AN7514 and AN7515

Figure 6. Unclamped Inductive Switching Capability

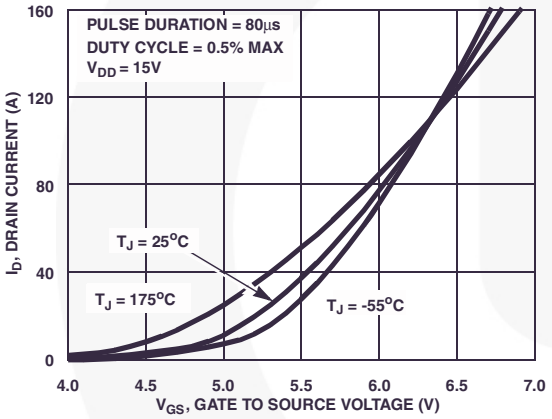

Figure 7. Transfer Characteristics

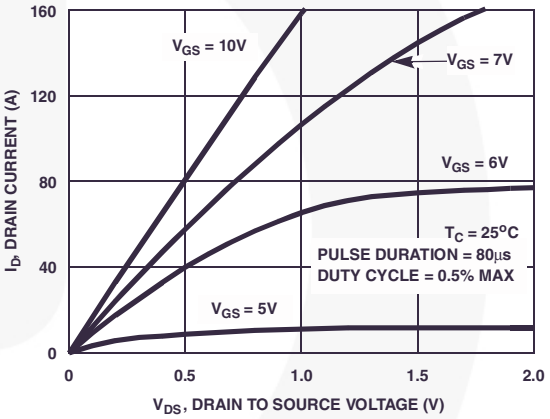

Figure 8. Saturation Characteristics

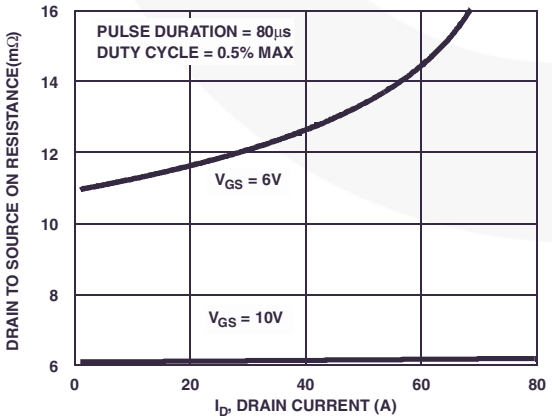

Figure 9. Drain to Source On Resistance vs Drain Current

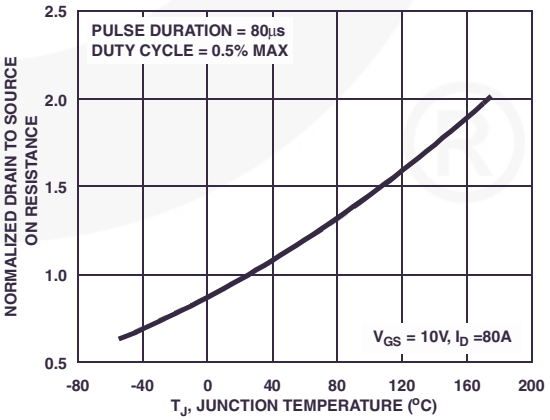

Figure 10. Normalized Drain to Source On Resistance vs Junction Temperature

Typical Characteristics T_C = 25°C unless otherwise noted

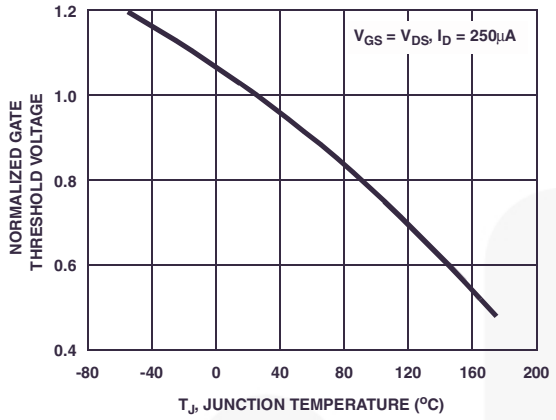

Figure 11. Normalized Gate Threshold Voltage vs Junction Temperature

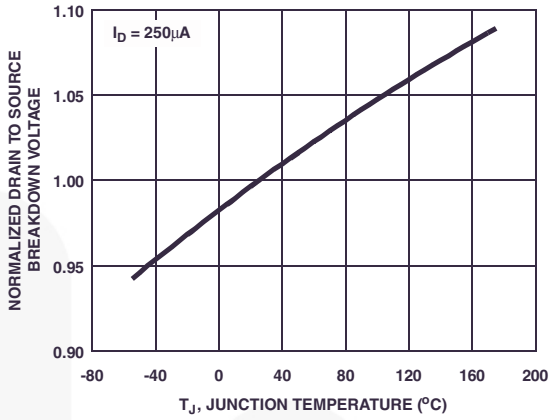

Figure 12. Normalized Drain to Source Breakdown Voltage vs Junction Temperature

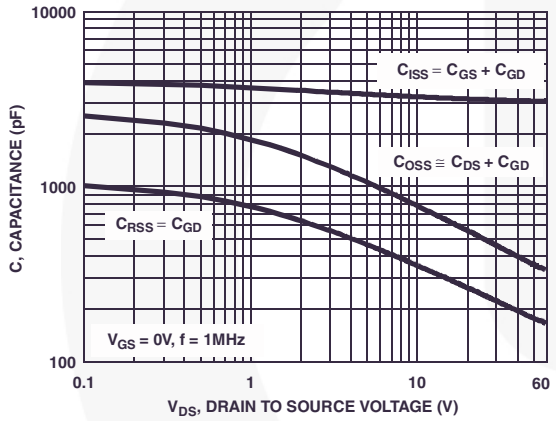

Figure 13. Capacitance vs Drain to Source Voltage

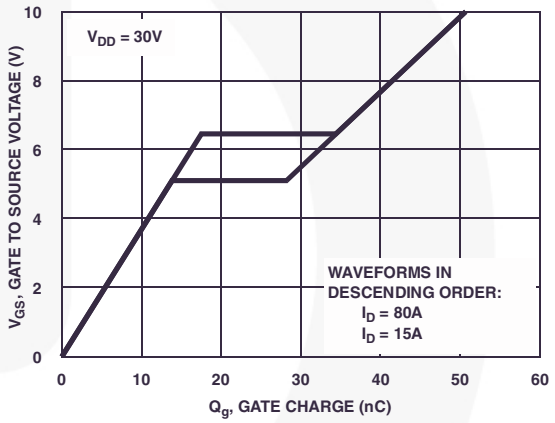

Figure 14. Gate Charge Waveforms for Constant Gate Current

Test Circuits and Waveforms

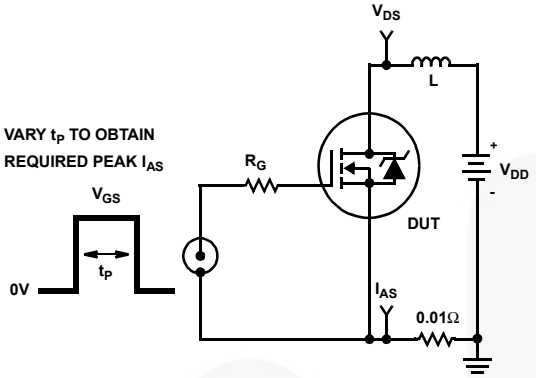

Figure 15. Unclamped Energy Test Circuit

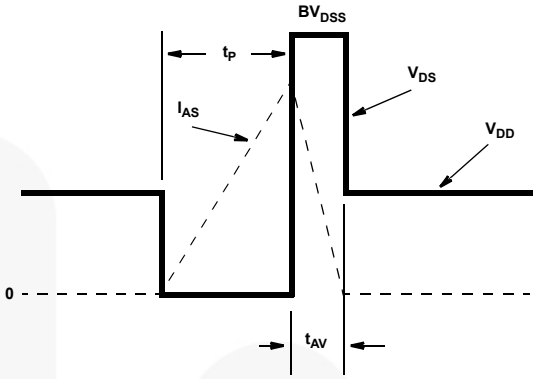

Figure 16. Unclamped Energy Waveforms

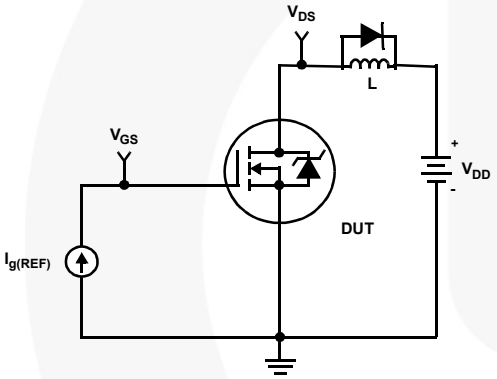

Figure 17. Gate Charge Test Circuit

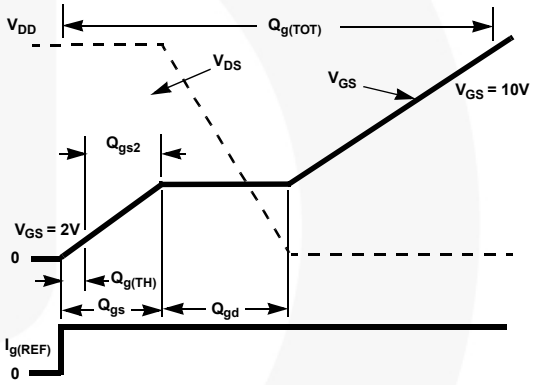

Figure 18. Gate Charge Waveforms

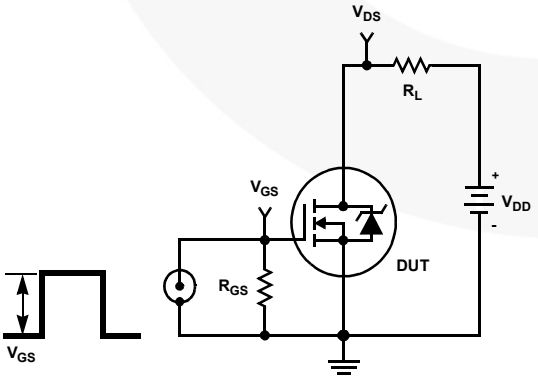

Figure 19. Switching Time Test Circuit

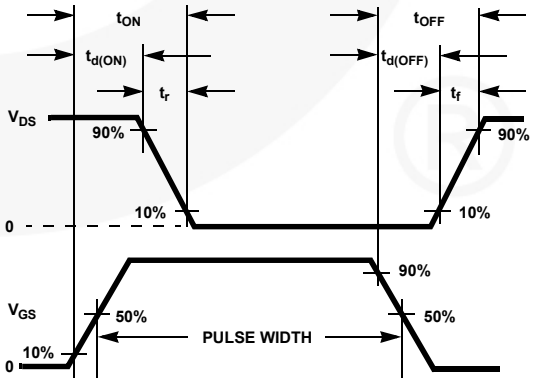

Figure 20. Switching Time Waveforms

Thermal Resistance vs. Mounting Pad Area

The maximum rated junction temperature, T_{JM}, and the thermal resistance of the heat dissipating path determines the maximum allowable device power dissipation, P_{DM}, in an application. Therefore the application's ambient temperature, T_A (°C), and thermal resistance $R_{\theta JA}$ (°C/W) must be reviewed to ensure that T_{JM} is never exceeded. Equation 1 mathematically represents the relationship and serves as the basis for establishing the rating of the part.

$$P_{DM} = \frac{(T_{JM} - T_A)}{R_{\theta JA}} \qquad \text{(EQ. 1)}$$

In using surface mount devices such as the TO-263 package, the environment in which it is applied will have a significant influence on the part's current and maximum power dissipation ratings. Precise determination of P_{DM} is complex and influenced by many factors:

1. Mounting pad area onto which the device is attached and whether there is copper on one side or both sides of the board.
2. The number of copper layers and the thickness of the board.
3. The use of external heat sinks.
4. The use of thermal vias.
5. Air flow and board orientation.
6. For non steady state applications, the pulse width, the duty cycle and the transient thermal response of the part, the board and the environment they are in.

Fairchild provides thermal information to assist the designer's preliminary application evaluation. Figure 21 defines the $R_{\theta JA}$ for the device as a function of the top copper (component side) area. This is for a horizontally positioned FR-4 board with 1oz copper after 1000 seconds of steady state power with no air flow. This graph provides the necessary information for calculation of the steady state junction temperature or power dissipation. Pulse applications can be evaluated using the Fairchild device Spice thermal model or manually utilizing the normalized maximum transient thermal impedance curve.

Thermal resistances corresponding to other copper areas can be obtained from Figure 21 or by calculation using Equation 2 or 3. Equation 2 is used for copper area defined in inches square and equation 3 is for area in centimeters square. The area, in square inches or square centimeters is the top copper area including the gate and source pads.

$$R_{\theta JA} = 26.51 + \frac{19.84}{(0.262 + Area)} \qquad \text{(EQ. 2)}$$

Area in Inches Squared

$$R_{\theta JA} = 26.51 + \frac{128}{(1.69 + Area)} \qquad \text{(EQ. 3)}$$

Area in Centimeters Squared

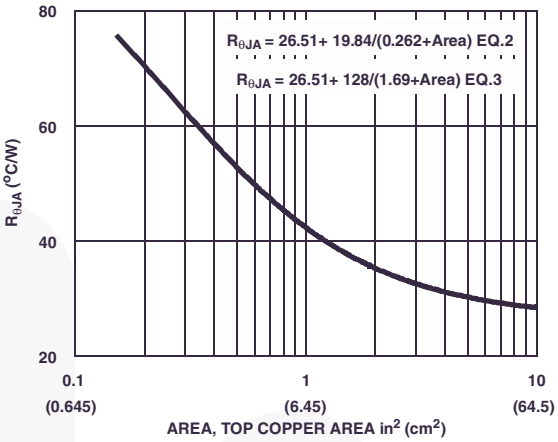

Figure 21. Thermal Resistance vs Mounting Pad Area

PSPICE Electrical Model

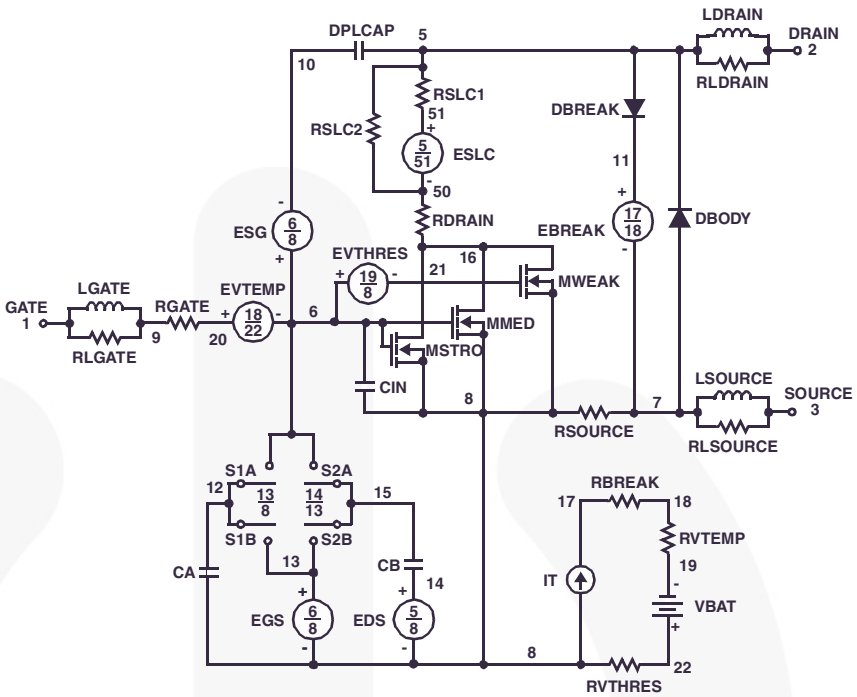

.SUBCKT FDB070AN06A0 2 1 3 ; rev March 2003
Ca 12 8 1.5e-9
Cb 15 14 1.5e-9
Cin 6 8 2.9e-9

Dbody 7 5 DbodyMOD
Dbreak 5 11 DbreakMOD
Dplcap 10 5 DplcapMOD

Ebreak 11 7 17 18 62
Eds 14 8 5 8 1
Egs 13 8 6 8 1
Esg 6 10 6 8 1
Evthres 6 21 19 8 1
Evtemp 20 6 18 22 1

It 8 17 1

Lgate 1 9 4.8e-9
Ldrain 2 5 1.0e-9
Lsource 3 7 3e-9

RLgate 1 9 48
RLdrain 2 5 10
RLsource 3 7 3

Mmed 16 6 8 8 MmedMOD
Mstro 16 6 8 8 MstroMOD
Mweak 16 21 8 8 MweakMOD

Rbreak 17 18 RbreakMOD 1
Rdrain 50 16 RdrainMOD 1.3e-3
Rgate 9 20 2.7
RSLC1 5 51 RSLCMOD 1e-6
RSLC2 5 50 1e3
Rsource 8 7 RsourceMOD 3.1e-3
Rvthres 22 8 RvthresMOD 1
Rvtemp 18 19 RvtempMOD 1
S1a 6 12 13 8 S1AMOD
S1b 13 12 13 8 S1BMOD
S2a 6 15 14 13 S2AMOD
S2b 13 15 14 13 S2BMOD

Vbat 22 19 DC 1
ESLC 51 50 VALUE={(V(5,51)/ABS(V(5,51)))*(PWR(V(5,51)/(1e-6*250),10))}

.MODEL DbodyMOD D (IS=7.6E-12 N=1.04 RS=2.2e-3 TRS1=2.7e-3 TRS2=2e-7
+ CJO=1.6e-9 M=0.55 TT=5e-12 XTI=3.9)
.MODEL DbreakMOD D (RS=8e-1 TRS1=5e-4 TRS2=-8.9e-6)
.MODEL DplcapMOD D (CJO=1.05e-9 IS=1e-30 N=10 M=0.45)

.MODEL MmedMOD NMOS (VTO=3.7 KP=10 IS=1e-30 N=10 TOX=1 L=1u W=1u RG=2.7)
.MODEL MstroMOD NMOS (VTO=4.7 KP=100 IS=1e-30 N=10 TOX=1 L=1u W=1u)
.MODEL MweakMOD NMOS (VTO=3.01 KP=0.03 IS=1e-30 N=10 TOX=1 L=1u W=1u RG=27 RS=0.1)

.MODEL RbreakMOD RES (TC1=7.1e-4 TC2=-5.5e-7)
.MODEL RdrainMOD RES (TC1=1.7e-2 TC2=4e-5)
.MODEL RSLCMOD RES (TC1=3e-3 TC2=1e-5)
.MODEL RsourceMOD RES (TC1=1e-3 TC2=1e-6)
.MODEL RvthresMOD RES (TC1=-5.2e-3 TC2=-1.5e-5)
.MODEL RvtempMOD RES (TC1=-3e-3 TC2=1.3e-6)

.MODEL S1AMOD VSWITCH (RON=1e-5 ROFF=0.1 VON=-4 VOFF=-2)
.MODEL S1BMOD VSWITCH (RON=1e-5 ROFF=0.1 VON=-2 VOFF=-4)
.MODEL S2AMOD VSWITCH (RON=1e-5 ROFF=0.1 VON=-1.5 VOFF=0.5)
.MODEL S2BMOD VSWITCH (RON=1e-5 ROFF=0.1 VON=0.5 VOFF=-1.5)
.ENDS

Note: For further discussion of the PSPICE model, consult **A New PSPICE Sub-Circuit for the Power MOSFET Featuring Global Temperature Options**; IEEE Power Electronics Specialist Conference Records, 1991, written by William J. Hepp and C. Frank Wheatley.

SABER Electrical Model

```
rev March 2003
template FDB070AN06A0 n2,n1,n3
electrical n2,n1,n3
{
var i iscl
dp..model dbodymod = (isl=7.6e-12,nl=1.04,rs=2.2e-3,trs1=2.7e-3,trs2=2e-7,cjo=1.6e-9,m=0.55,tt=5e-12,xti=3.9)
dp..model dbreakmod = (rs=8e-1,trs1=5e-4,trs2=-8.9e-6)
dp..model dplcapmod = (cjo=1.05e-9,isl=10e-30,nl=10,m=0.45)
m..model mmedmod = (type=_n,vto=3.7,kp=10,is=1e-30, tox=1)
m..model mstrongmod = (type=_n,vto=4.7,kp=100,is=1e-30, tox=1)
m..model mweakmod = (type=_n,vto=3.01,kp=0.03,is=1e-30, tox=1,rs=0.1)
sw_vcsp..model s1amod = (ron=1e-5,roff=0.1,von=-4,voff=-2)
sw_vcsp..model s1bmod = (ron=1e-5,roff=0.1,von=-2,voff=-4)
sw_vcsp..model s2amod = (ron=1e-5,roff=0.1,von=-1.5,voff=0.5)
sw_vcsp..model s2bmod = (ron=1e-5,roff=0.1,von=0.5,voff=-1.5)
c.ca n12 n8 = 1.5e-9
c.cb n15 n14 = 1.5e-9
c.cin n6 n8 = 2.9e-9

dp.dbody n7 n5 = model=dbodymod
dp.dbreak n5 n11 = model=dbreakmod
dp.dplcap n10 n5 = model=dplcapmod

spe.ebreak n11 n7 n17 n18 = 62
spe.eds n14 n8 n5 n8 = 1
spe.egs n13 n8 n6 n8 = 1
spe.esg n6 n10 n6 n8 = 1
spe.evthres n6 n21 n19 n8 = 1
spe.evtemp n20 n6 n18 n22 = 1

i.it n8 n17 = 1

l.lgate n1 n9 = 4.8e-9
l.ldrain n2 n5 = 1.0e-9
l.lsource n3 n7 = 3e-9

res.rlgate n1 n9 = 48
res.rldrain n2 n5 = 10
res.rlsource n3 n7 = 3

m.mmed n16 n6 n8 n8 = model=mmedmod, l=1u, w=1u
m.mstrong n16 n6 n8 n8 = model=mstrongmod, l=1u, w=1u
m.mweak n16 n21 n8 n8 = model=mweakmod, l=1u, w=1u

res.rbreak n17 n18 = 1, tc1=7.1e-4,tc2=-5.5e-7
res.rdrain n50 n16 = 1.3e-3, tc1=1.7e-2,tc2=4e-5
res.rgate n9 n20 = 2.7
res.rslc1 n5 n51 = 1e-6, tc1=3e-3,tc2=1e-5
res.rslc2 n5 n50 = 1e3
res.rsource n8 n7 = 3.1e-3, tc1=1e-3,tc2=1e-6
res.rvthres n22 n8 = 1, tc1=-5.2e-3,tc2=-1.5e-5
res.rvtemp n18 n19 = 1, tc1=-3e-3,tc2=1.3e-6
sw_vcsp.s1a n6 n12 n13 n8 = model=s1amod
sw_vcsp.s1b n13 n12 n13 n8 = model=s1bmod
sw_vcsp.s2a n6 n15 n14 n13 = model=s2amod
sw_vcsp.s2b n13 n15 n14 n13 = model=s2bmod

v.vbat n22 n19 = dc=1
equations {
i (n51->n50) +=iscl
iscl: v(n51,n50) = ((v(n5,n51)/(1e-9+abs(v(n5,n51))))*((abs(v(n5,n51)*1e6/250))** 10))
}
}
```

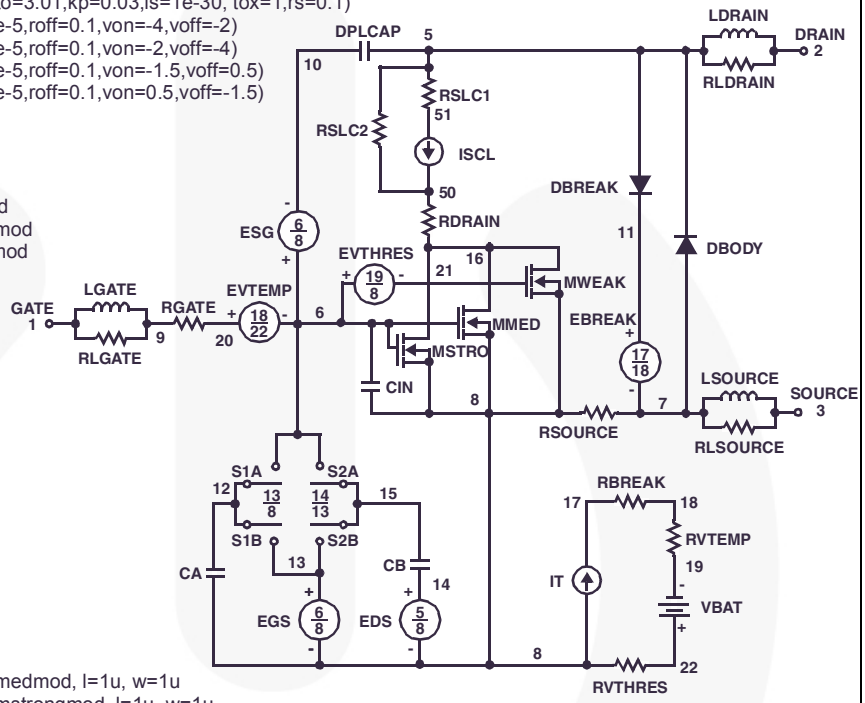

SPICE Thermal Model

REV 23 March 2003

FDB070AN06A0T

CTHERM1 TH 6 3.5e-3
CTHERM2 6 5 1.7e-2
CTHERM3 5 4 1.8e-2
CTHERM4 4 3 1.9e-2
CTHERM5 3 2 4.7e-2
CTHERM6 2 TL 7e-2

RTHERM1 TH 6 2e-2
RTHERM2 6 5 7e-2
RTHERM3 5 4 1e-1
RTHERM4 4 3 1.5e-1
RTHERM5 3 2 1.6e-1
RTHERM6 2 TL 1.85e-1

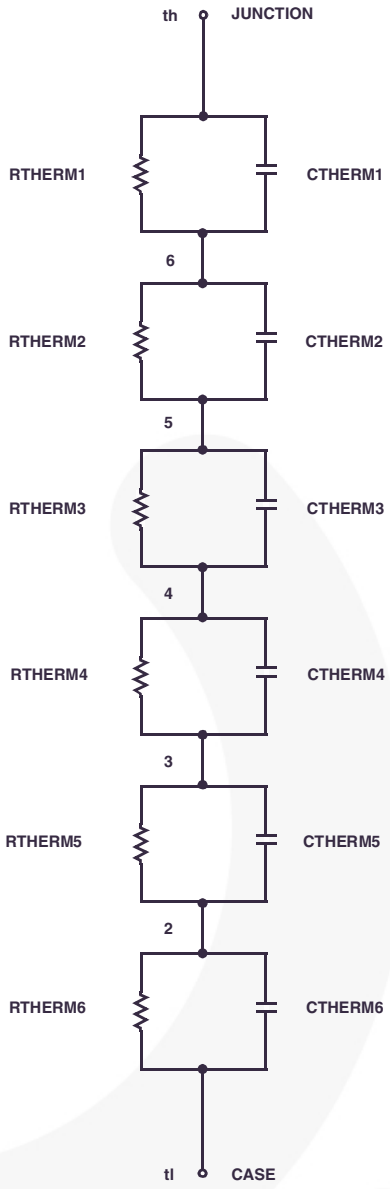

SABER Thermal Model

```
SABER thermal model FDB070AN06A0T
template thermal_model th tl
thermal_c th, tl
{
ctherm.ctherm1 th 6 =3.5e-3
ctherm.ctherm2 6 5 =1.7e-2
ctherm.ctherm3 5 4 =1.8e-2
ctherm.ctherm4 4 3 =1.9e-2
ctherm.ctherm5 3 2 =4.7e-2
ctherm.ctherm6 2 tl =7e-2

rtherm.rtherm1 th 6 =2e-2
rtherm.rtherm2 6 5 =7e-2
rtherm.rtherm3 5 4 =1e-1
rtherm.rtherm4 4 3 =1.5e-1
rtherm.rtherm5 3 2 =1.6e-1
rtherm.rtherm6 2 tl =1.85e-1
}
```

Mechanical Dimensions

TO-263 2L (D^2PAK)

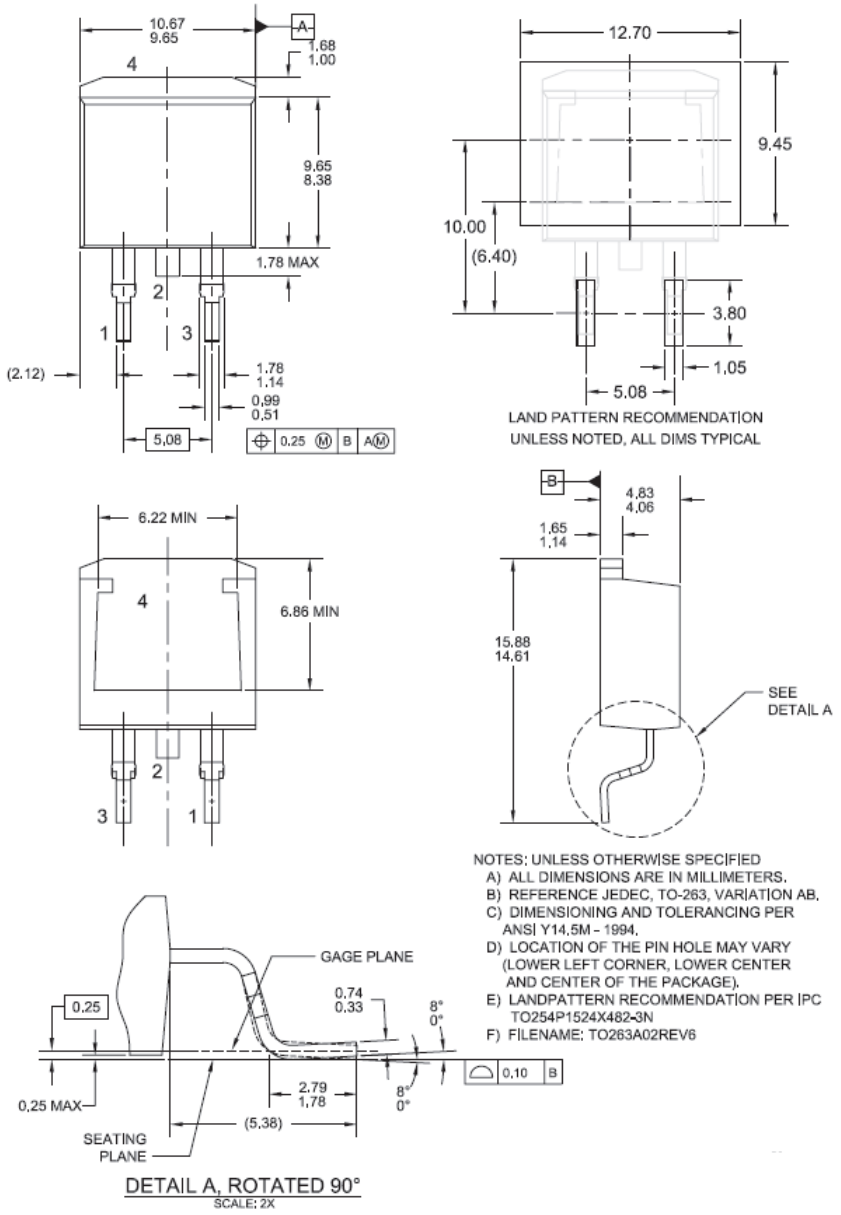

Figure 22. 2LD, TO263, Surface Mount

Package drawings are provided as a service to customers considering Fairchild components. Drawings may change in any manner without notice. Please note the revision and/or date on the drawing and contact a Fairchild Semiconductor representative to verify or obtain the most recent revision. Package specifications do not expand the terms of Fairchild's worldwide terms and conditions, specifically the warranty therein, which covers Fairchild products.

Always visit Fairchild Semiconductor's online packaging area for the most recent package drawings:

http://www.fairchildsemi.com/package/packageDetails.html?id=PN_TT263-002

Dimension in Millimeters

FAIRCHILD SEMICONDUCTOR®

TRADEMARKS

The following includes registered and unregistered trademarks and service marks, owned by Fairchild Semiconductor and/or its global subsidiaries, and is not intended to be an exhaustive list of all such trademarks.

AccuPower™
AX-CAP®*
BitSiC™
Build it Now™
CorePLUS™
CorePOWER™
CROSSVOLT™
CTL™
Current Transfer Logic™
DEUXPEED®
Dual Cool™
EcoSPARK®
EfficentMax™
ESBC™
F®
Fairchild®
Fairchild Semiconductor®
FACT Quiet Series™
FACT®
FAST®
FastvCore™
FETBench™
FPS™
F-PFS™
FRFET®
Global Power Resource℠
GreenBridge™
Green FPS™
Green FPS™ e-Series™
G*max*™
GTO™
IntelliMAX™
ISOPLANAR™
Marking Small Speakers Sound Louder and Better™
MegaBuck™
MICROCOUPLER™
MicroFET™
MicroPak™
MicroPak2™
MillerDrive™
MotionMax™
mWSaver®
OptoHiT™
OPTOLOGIC®
OPTOPLANAR®
®
PowerTrench®
PowerXS™
Programmable Active Droop™
QFET®
QS™
Quiet Series™
RapidConfigure™
™
Saving our world, 1mW/W/kW at a time™
SignalWise™
SmartMax™
SMART START™
Solutions for Your Success™
SPM®
STEALTH™
SuperFET®
SuperSOT™-3
SuperSOT™-6
SuperSOT™-8
SupreMOS®
SyncFET™
Sync-Lock™
SYSTEM GENERAL ®*
TinyBoost®
TinyBuck®
TinyCalc™
TinyLogic®
TINYOPTO™
TinyPower™
TinyPWM™
TinyWire™
TranSiC™
TriFault Detect™
TRUECURRENT®*
µSerDes™
µSerDes™
UHC®
Ultra FRFET™
UniFET™
VCX™
VisualMax™
VoltagePlus™
XS™

*Trademarks of System General Corporation, used under license by Fairchild Semiconductor.

DISCLAIMER

FAIRCHILD SEMICONDUCTOR RESERVES THE RIGHT TO MAKE CHANGES WITHOUT FURTHER NOTICE TO ANY PRODUCTS HEREIN TO IMPROVE RELIABILITY, FUNCTION, OR DESIGN. FAIRCHILD DOES NOT ASSUME ANY LIABILITY ARISING OUT OF THE APPLICATION OR USE OF ANY PRODUCT OR CIRCUIT DESCRIBED HEREIN; NEITHER DOES IT CONVEY ANY LICENSE UNDER ITS PATENT RIGHTS, NOR THE RIGHTS OF OTHERS. THESE SPECIFICATIONS DO NOT EXPAND THE TERMS OF FAIRCHILD'S WORLDWIDE TERMS AND CONDITIONS, SPECIFICALLY THE WARRANTY THEREIN, WHICH COVERS THESE PRODUCTS.

LIFE SUPPORT POLICY

FAIRCHILD'S PRODUCTS ARE NOT AUTHORIZED FOR USE AS CRITICAL COMPONENTS IN LIFE SUPPORT DEVICES OR SYSTEMS WITHOUT THE EXPRESS WRITTEN APPROVAL OF FAIRCHILD SEMICONDUCTOR CORPORATION.

As used here in:

1. Life support devices or systems are devices or systems which, (a) are intended for surgical implant into the body or (b) support or sustain life, and (c) whose failure to perform when properly used in accordance with instructions for use provided in the labeling, can be reasonably expected to result in a significant injury of the user.
2. A critical component in any component of a life support, device, or system whose failure to perform can be reasonably expected to cause the failure of the life support device or system, or to affect its safety or effectiveness.

ANTI-COUNTERFEITING POLICY

Fairchild Semiconductor Corporation's Anti-Counterfeiting Policy. Fairchild's Anti-Counterfeiting Policy is also stated on our external website, www.Fairchildsemi.com, under Sales Support.

Counterfeiting of semiconductor parts is a growing problem in the industry. All manufactures of semiconductor products are experiencing counterfeiting of their parts. Customers who inadvertently purchase counterfeit parts experience many problems such as loss of brand reputation, substandard performance, failed application, and increased cost of production and manufacturing delays. Fairchild is taking strong measures to protect ourselves and our customers from the proliferation of counterfeit parts. Fairchild strongly encourages customers to purchase Fairchild parts either directly from Fairchild or from Authorized Fairchild Distributors who are listed by country on our web page cited above. Products customers buy either from Fairchild directly or from Authorized Fairchild Distributors are genuine parts, have full traceability, meet Fairchild's quality standards for handing and storage and provide access to Fairchild's full range of up-to-date technical and product information. Fairchild and our Authorized Distributors will stand behind all warranties and will appropriately address and warranty issues that may arise. Fairchild will not provide any warranty coverage or other assistance for parts bought from Unauthorized Sources. Fairchild is committed to combat this global problem and encourage our customers to do their part in stopping this practice by buying direct or from authorized distributors.

PRODUCT STATUS DEFINITIONS

Definition of Terms

Datasheet Identification	Product Status	Definition
Advance Information	Formative / In Design	Datasheet contains the design specifications for product development. Specifications may change in any manner without notice.
Preliminary	First Production	Datasheet contains preliminary data; supplementary data will be published at a later date. Fairchild Semiconductor reserves the right to make changes at any time without notice to improve design.
No Identification Needed	Full Production	Datasheet contains final specifications. Fairchild Semiconductor reserves the right to make changes at any time without notice to improve the design.
Obsolete	Not In Production	Datasheet contains specifications on a product that is discontinued by Fairchild Semiconductor. The datasheet is for reference information only.

Rev. I66

ON Semiconductor and ON are trademarks of Semiconductor Components Industries, LLC dba ON Semiconductor or its subsidiaries in the United States and/or other countries. ON Semiconductor owns the rights to a number of patents, trademarks, copyrights, trade secrets, and other intellectual property. A listing of ON Semiconductor's product/patent coverage may be accessed at www.onsemi.com/site/pdf/Patent−Marking.pdf. ON Semiconductor reserves the right to make changes without further notice to any products herein. ON Semiconductor makes no warranty, representation or guarantee regarding the suitability of its products for any particular purpose, nor does ON Semiconductor assume any liability arising out of the application or use of any product or circuit, and specifically disclaims any and all liability, including without limitation special, consequential or incidental damages. Buyer is responsible for its products and applications using ON Semiconductor products, including compliance with all laws, regulations and safety requirements or standards, regardless of any support or applications information provided by ON Semiconductor. "Typical" parameters which may be provided in ON Semiconductor data sheets and/or specifications can and do vary in different applications and actual performance may vary over time. All operating parameters, including "Typicals" must be validated for each customer application by customer's technical experts. ON Semiconductor does not convey any license under its patent rights nor the rights of others. ON Semiconductor products are not designed, intended, or authorized for use as a critical component in life support systems or any FDA Class 3 medical devices or medical devices with a same or similar classification in a foreign jurisdiction or any devices intended for implantation in the human body. Should Buyer purchase or use ON Semiconductor products for any such unintended or unauthorized application, Buyer shall indemnify and hold ON Semiconductor and its officers, employees, subsidiaries, affiliates, and distributors harmless against all claims, costs, damages, and expenses, and reasonable attorney fees arising out of, directly or indirectly, any claim of personal injury or death associated with such unintended or unauthorized use, even if such claim alleges that ON Semiconductor was negligent regarding the design or manufacture of the part. ON Semiconductor is an Equal Opportunity/Affirmative Action Employer. This literature is subject to all applicable copyright laws and is not for resale in any manner.

PUBLICATION ORDERING INFORMATION

LITERATURE FULFILLMENT:
Literature Distribution Center for ON Semiconductor
19521 E. 32nd Pkwy, Aurora, Colorado 80011 USA
Phone: 303−675−2175 or 800−344−3860 Toll Free USA/Canada
Fax: 303−675−2176 or 800−344−3867 Toll Free USA/Canada
Email: orderlit@onsemi.com

N. American Technical Support: 800−282−9855 Toll Free USA/Canada
Europe, Middle East and Africa Technical Support:
Phone: 421 33 790 2910
Japan Customer Focus Center
Phone: 81−3−5817−1050

ON Semiconductor Website: **www.onsemi.com**

Order Literature: http://www.onsemi.com/orderlit

For additional information, please contact your local Sales Representative