SDxxCL

1. Description

The SDxxCL Series are ultra-low capacitance transient voltage suppressor arrays, designed to protect applications such as portable electronics and smart phones. This series is available bidirectional configurations and is rated at 300 Watts for an 8/20us waveshape. At higher operating frequencies or faster edge rates, insertion loss and signal integrity are a major concern. This series offers a ultra-low capacitance and low leakage current in a miniature SOD-323 package.

2. Features

- IEC 61000-4-2 Level 4 ESD Protection
  - ±15kV Contact Discharge
  - ±15kV Air Discharge
- IEC 61000-4-4 EFT Protection
  - 40A (5/50ns)
- 300W Peak pulse Power (8/20us)
- RoHS compliance
- Bidirectional configuration
- Ultra-low Capacitance: 0.8pF (Typical)
- Low clamping voltage
- Protects one power or I/O

3. Applications

- Interfaces
  - USB 2.0/1.1
  - GPIO
  - Ethernet 10/100/1000 Mbps
  - Audio
- End Equipment
  - Industrial and Serve Robots
  - Laptops and Desktops
  - TV and Monitors
  - Wearables

4. Ordering Information

Part Number	Package	Material	Packing	Quantity per reel	Flammability Rating	Reel Size
SDxxCL	SOD-323	Halogen free	Tape & Reel	3000 PCS	UL 94V-0	7 inches

Marking for the SDxxCL series							
V_{RWM}	3.3V	5V	8V	12V	15V	24V	-
Marking	CC	AC	BC	DC	EC	HC	-

Table-1 Ordering information

5. Pin Configuration and Functions

Pin	Name	Description	Outline	Circuit Diagram
1	IO	Connect to IO		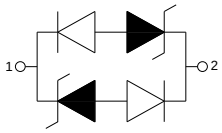
2	IO	Connect to IO		

Table-2 Pin configuration

6. Specification

6.1. Absolute Maximum rating

Over operating free-air temperature range (unless otherwise noted)

Parameters	Symbol	Min.	Max.	Unit
Peak pulse power (tp=8/20us)@25℃	P_{pk}	-	300	W
Peak pulse current (tp=8/20us)@25℃	I_{PP}		Refer to Table-5	A
ESD (IEC61000-4-2 air discharge) @25℃	V_{ESD}	-	±15	kV
ESD (IEC61000-4-2 contact discharge) @25℃	V_{ESD}	-	±15	kV
Junction temperature	T_J	-	150	℃
Operating temperature	T_{OP}	-40	125	℃
Storage temperature	T_{STG}	-55	150	℃
Lead temperature	T_L	-	260	℃

Table-3 Absolute Maximum rating

6.2. Electrical Characteristics

Symbol	Description
V_{RWM}	Rated reverse stand-off voltage
V_{BR}	Minimum breakdown voltage @I_T = 1mA
V_{CL}	Typical Clamping voltage
I_{PP}	Maximum peak pulse current
I_R	Reverse leakage current @V_{RWM}
C_O	Typical line capacitance (V_{IO}=0V, V_{P-P} = 30mV, f = 1MHz)

Table-4 Parameters Description

At TA = 25℃ unless otherwise noted

Part Number	V_{RWM}	V_{BR}	V_{CL}@I=1A	I_{PP}	V_{CL}@I=I_{PP}	I_R	C_O
	(V)	(V)	(V)	(A)	(V)	(uA)	(pF)
SD03CL	3.3	4.5	8.5	14.0	20.0	1.0	0.8
SD05CL	5.0	6.5	9.5	12.0	21.0	1.0	0.8
SD08CL	8.0	8.5	12.0	10.0	25.0	1.0	0.8
SD12CL	12.0	13.3	19.0	7.0	35	1.0	0.8
SD15CL	15.0	16.5	24	5.0	45	1.0	0.8
SD24CL	24.0	26.0	34	3.0	55	1.0	0.8

Table-5 Electrical Characteristics for All Series

7. Typical Characteristic

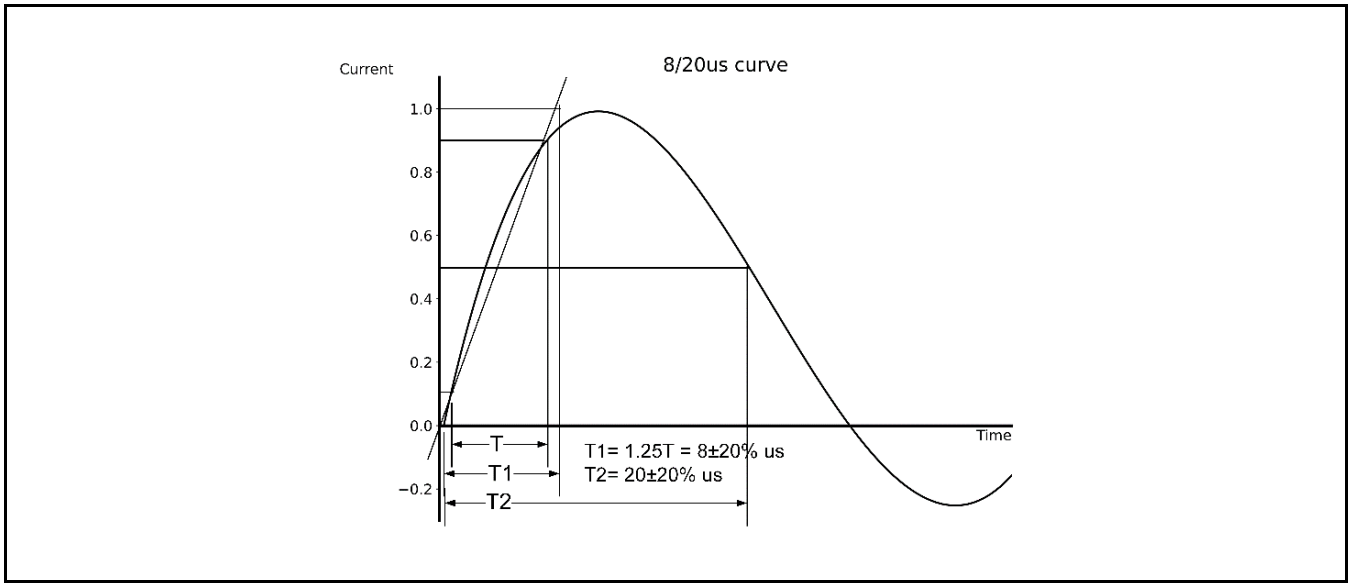

8. Typical Application

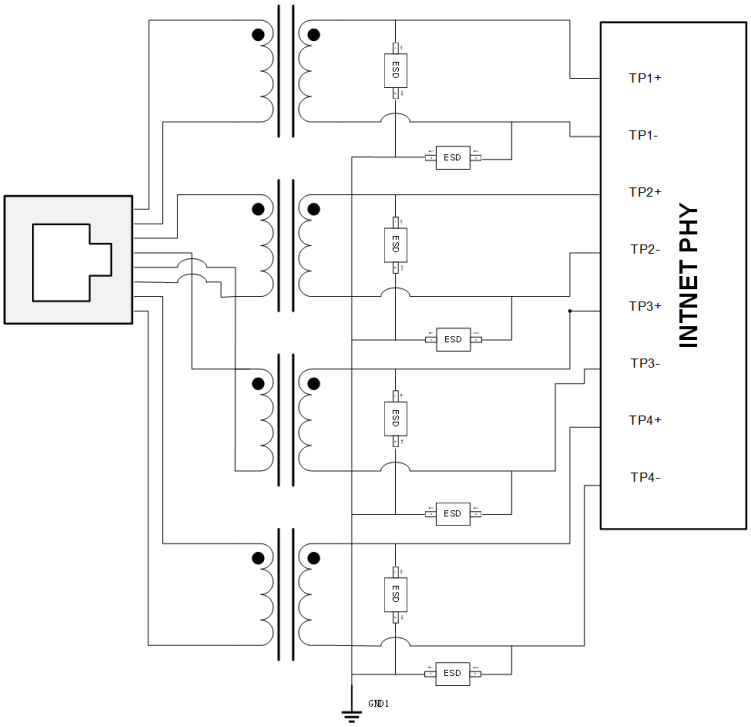

Pic-3 Typical Internet 1G Interface Application

9. Dimension

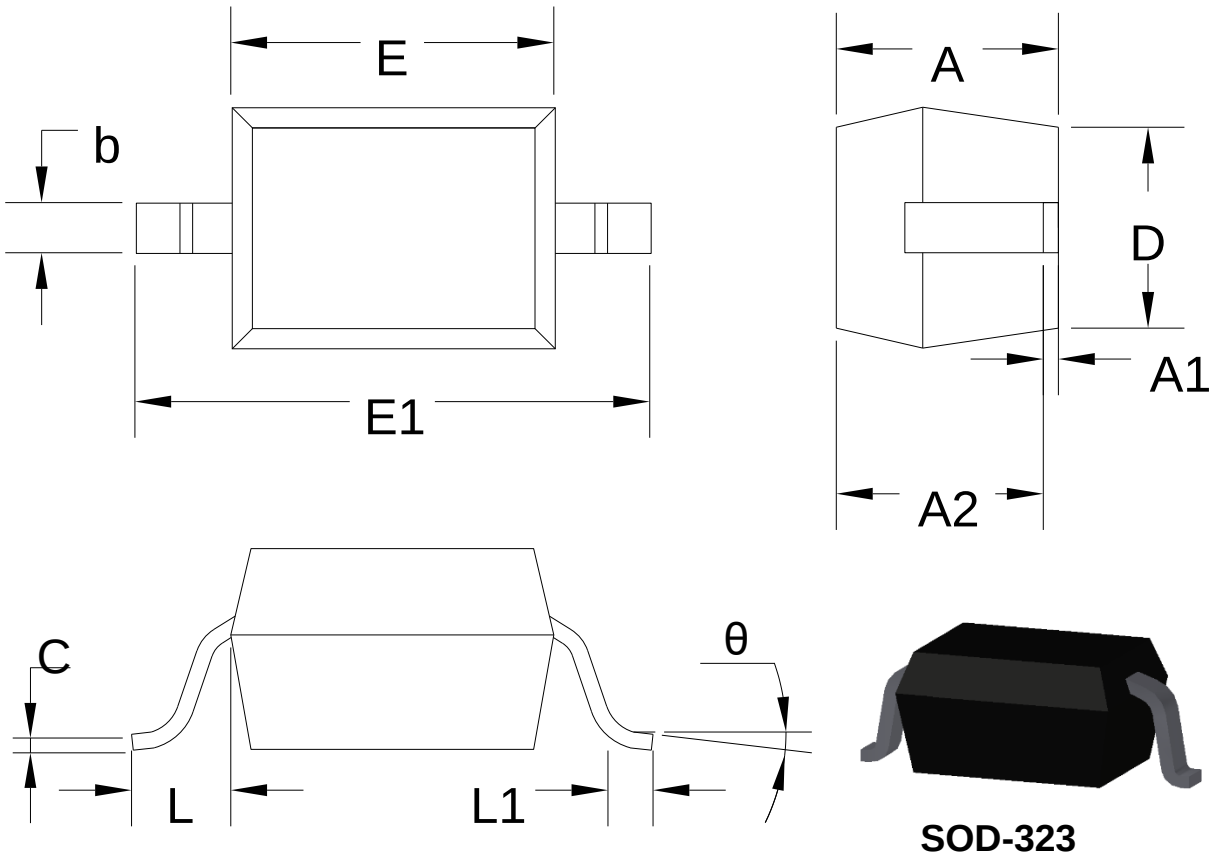

Symbol	Dimensions in Millimeters		Dimensions in Inches	
	Min.	Max.	Min.	Max.
A		1.000		0.039
A1	0.000	0.100	0.000	0.004
A2	0.800	0.900	0.031	0.035
b	0.250	0.350	0.010	0.014
C	0.080	0.150	0.003	0.006
D	1.200	1.400	0.047	0.055
E	1.600	1.800	0.063	0.071
E1	2.550	2.750	0.100	0.108
L	0.475REF		0.019REF	
L1	0.250	0.400	0.010	0.016
θ	0°	8°	0°	8°

Table-6 product dimensions

10. Recommended Land Pattern

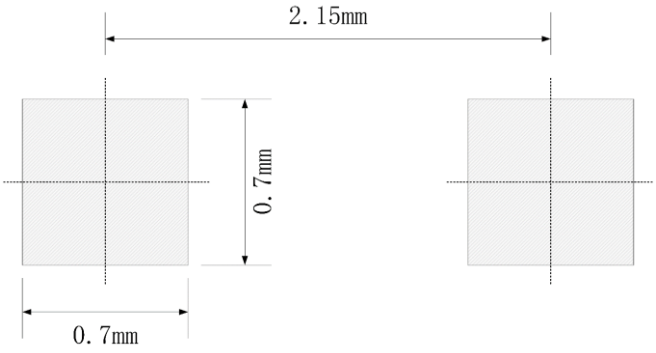

Note:

1. Controlling dimension: in millimeters
2. General tolerance: ±0.05mm
3. The pad layout is for reference only