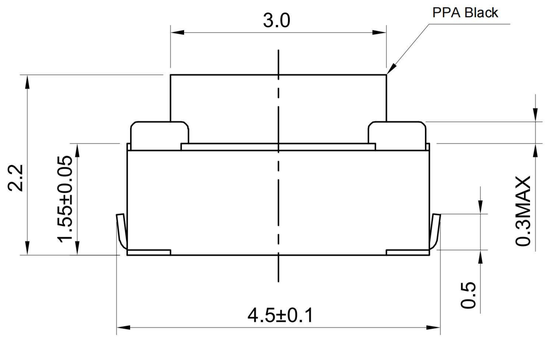

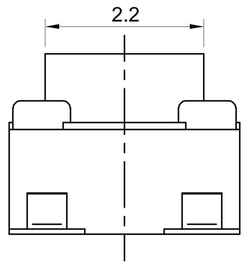

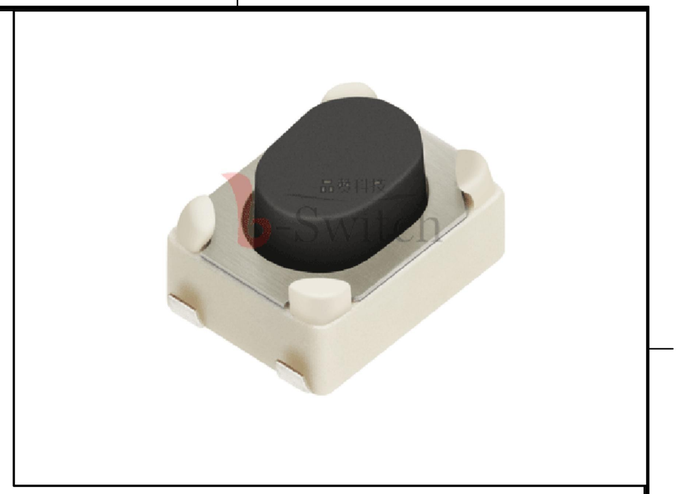

GT-TC048D-H022-L1

G-SWITCH

Operating Force
A=180gf
B=250gf
C=100gf
D=400gf

Switch Height (mm)
H022=2.2mm
H025=2.5mm

Switch lifetime (Force)
L1=100,000 Cycles
L5=500,000 Cycles

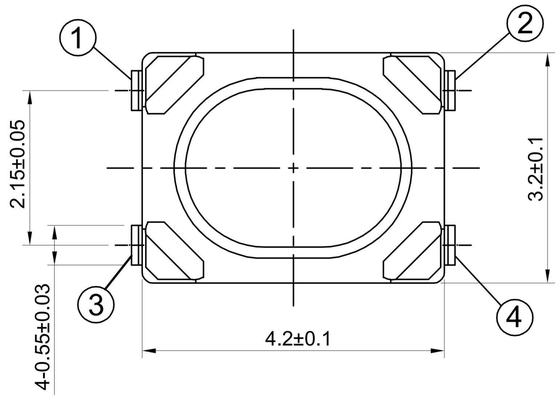

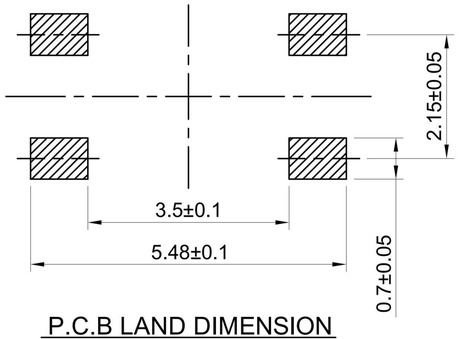

P.C.B LAND DIMENSION

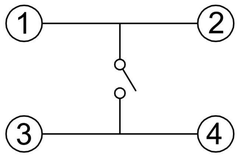

CIRCUIT DIAGRAM

G-Switch Specification:

1.Operating temperature range: -40℃to+85℃
2.Rating: 50mA.12V DC
3.Insulation resistance: 100MΩ min.100V DC
4.Dielectric strength: 250V AC for 1 min
5.Contact resistance: 100m Ω max.
6.Travel: 0.2±0.1mm

NO.	PART NAME	QTY	MATERIAL	REMARK
5	STEM	1	PPA	Black
4	COVER	1	SUS	Ag plating
3	CONTACT FORM	1	SUS	Ag plating
2	TERMINAL	4	BRASS	Ag plating
1	BASE	1	LCP-130i	

Pb Process Capable

RoHS Compliant 2002/95/EC

HALOGEN Compliant Halogen Free

SCALE: 8.3:1	UNIT: mm	Title: Vertical Tact Switch Stem PPA Smt U Type: 3.2×4.2×2.2mm				品赞科技 b-Switch ®
SIZE: A4						
Unless otherwise General Tolerance: X. ±0.30, X.x ±0.20, X.xx ±0.15, X.xxx ±0.10, Angles ±3°		Molde Code: GT-TC048D-H022-L1				
		DRAWN	CHECKED	APPROVED	DATE	
		Xia	Chen	Chen	2022.11.01	REV: A0 / SHEET: 1/1