ROHS

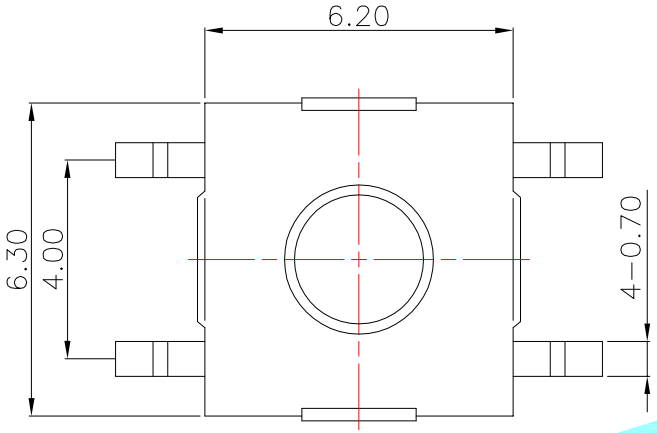

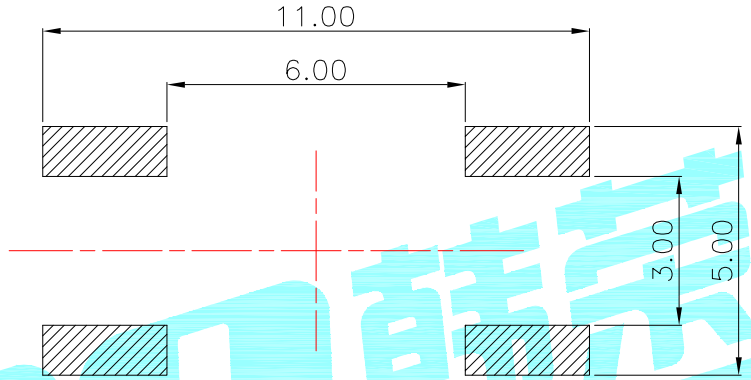

Typical Specifications :
1. Rating : DC 12V 50mA
2. Insulation resistance: ≥100MΩ
3. Withstand voltage: AC 500V/1min
4. Life:100,000 Cycles Min.

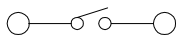

Circuit Diagram

NO.1	
PART NO	H
D	3.5
F	5

NO.2	
PART NO	vigor
3	180±30
4	250±30
5	350±50

NO.3-NO.4	
PART NO	NOTE
01~99	SERIAL NUMBER

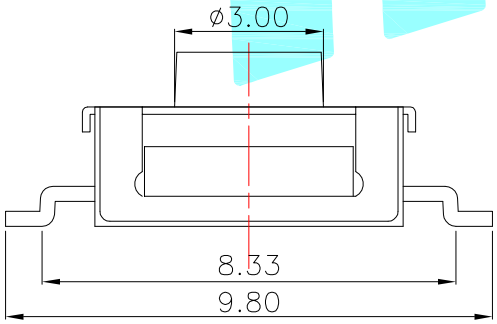

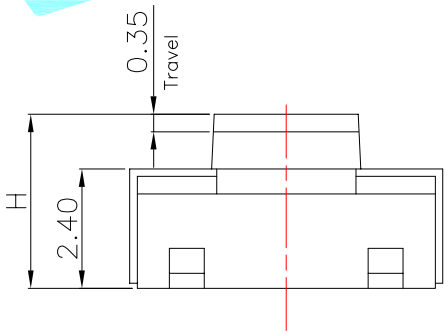

ITEM	PART NAME	TER'NO.	QTY.	MATERIAL	FINISHING	REMARK
⑤	Terminal	——	4	Phosphor Bronze	Plating silver	——
④	Contact	——	1	F.Ag/SUS	——	——
③	Base	——	1	PA46	Black	——
②	Cover	——	1	SPCC	Plating Sn	——
①	Keystoke	——	1	Silica gel	White	——

APPROVALS		DATE
DRAWN	xu qi feng	2014.10.28
CHECKED		
APPROVALS		

HRO韩荣® ELECTRONICS CO.,LTD

TITLE:	TACT SWITCHS
PART NO.	K2-1156SP-□□□W-□□
UNIT: mm	SCALE: 1:1
DRAWING NO.	——
PROJ:	SHEET 1 OF 1

TOLERANCES ARE		ANGLE
30~以上	±0.30	±2°
10~30	±0.20	
5~10	±0.15	
~ 5	±0.10	

ECN NO.	REV.	DATE.	DESCRIPTION.	CHANGE.	CHECK.	APPRO.
			2 修改按柄材质为蓝色硅胶20180407			
——	B	——	1 修改型号为单弹20160927	——	——	——
——	A	——	NEW	——	——	——