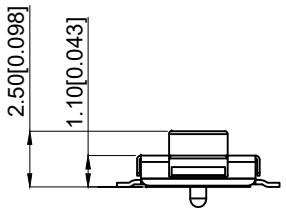

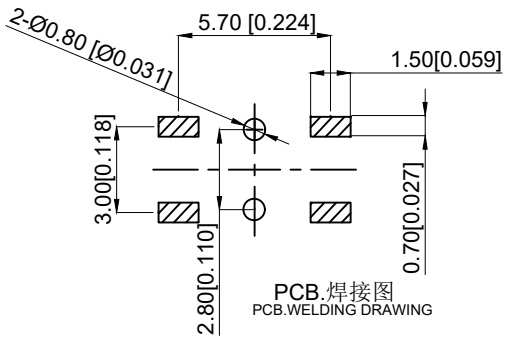

PCB.焊接图
PCB.WELDING DRAWING

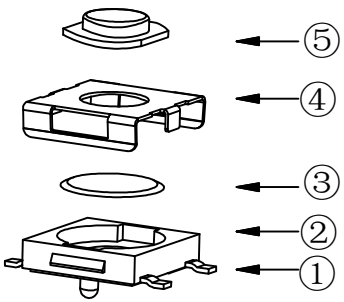

NOTES:
1.Rat voltage:12VDC 50mA
1.额电压：12VDC 50mA
2.Contact Resistance:≤100mΩ Max
2.接触电阻：≤100mΩ
3.Operating Force:260±50gf
3.操作力：260±50gf
4.Travel：0.25±0.1mm
4.行程：0.25 + 0.1mm
5.Insulation Resistance:≥100MΩ
5.绝缘电阻：≥100MΩ
6.Dielectric strength：≥250VAC
6.介电强度：≥250VAC
7.Life：30,000 times
7.寿命：30,000 times
8.Operating Temperature:-20℃±80℃
8.使用温度：-20℃±80℃

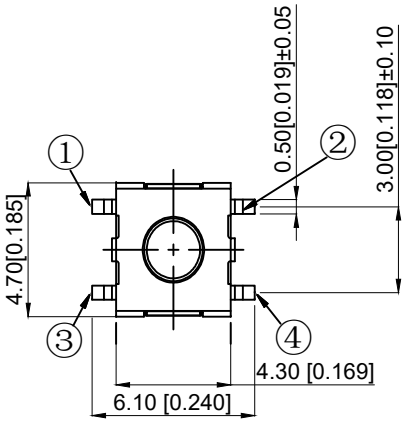

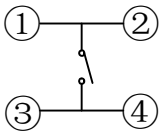

电路图
CIRCUIT DIAHRAM

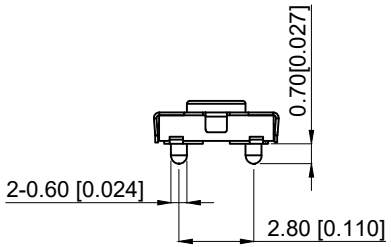

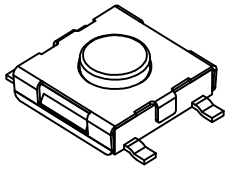

NO 序号	Part name 部件名	Material 材料	QTY 数量	Remark 备注
5	Push-Button 按钮	PPA	1	Black 黑色
4	Blind flange 盖板	SUS	1	
3	Shrapnel 弹片	SUS	1	Ag plating 镀银
2	Noumenon 本体	PPA	1	Black 黑色
1	Card 卡件	Brass	1	Ag plating 镀银

REV	DATE	REVISION DESCRIPTION	ISSUE
A4			
A3			
A2			
A1			

台普 ROCPU

COMMON TOLERANCE	
X.XX	± 0.10
X.X	± 0.15
X	± 0.25
ANGULAR	——

UNIT	MM	PROJCTED		PRODUCT NAME:
DRAWN BY	FUYUAN	CHECKED BY	COCO	MODEL NO: TP11822625
DATE	2019	APPROVAL B	ALEN	Https: www.rocpu.tw

ROCPU TECHNOLONGY CO.,LTD

Copies are issued in strict confidence and shall not be reproduced or copied,or used as the basic of manufacture or sale of apparatus without permission