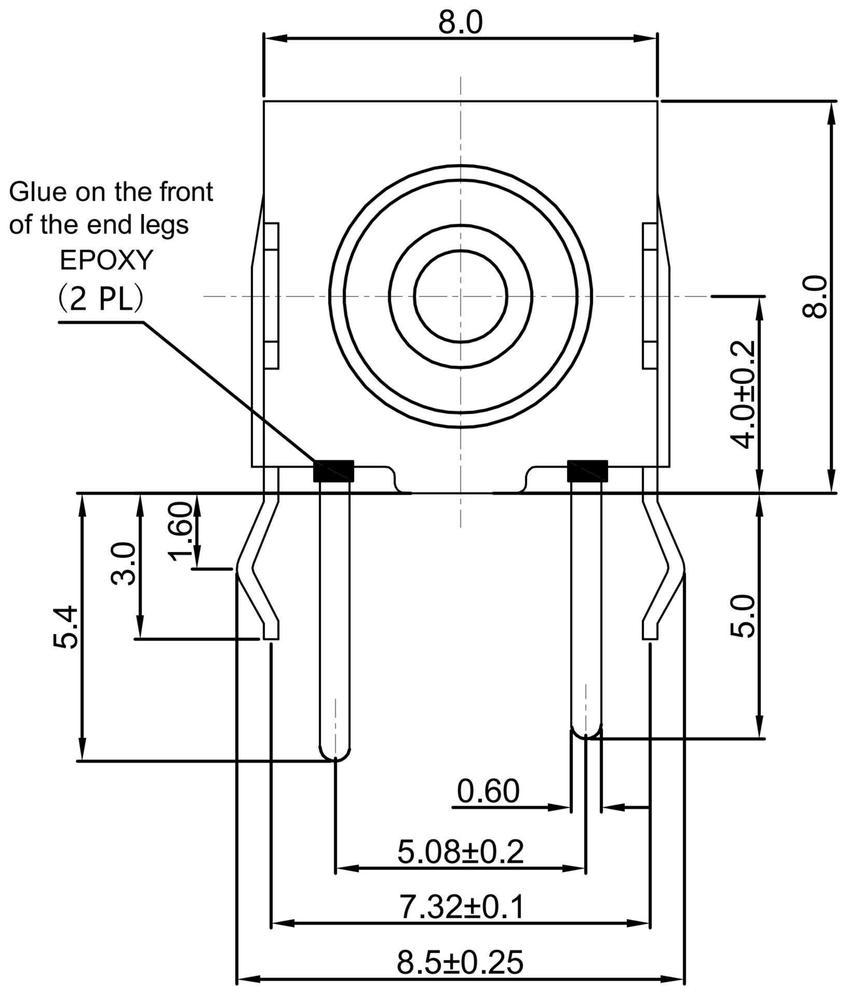

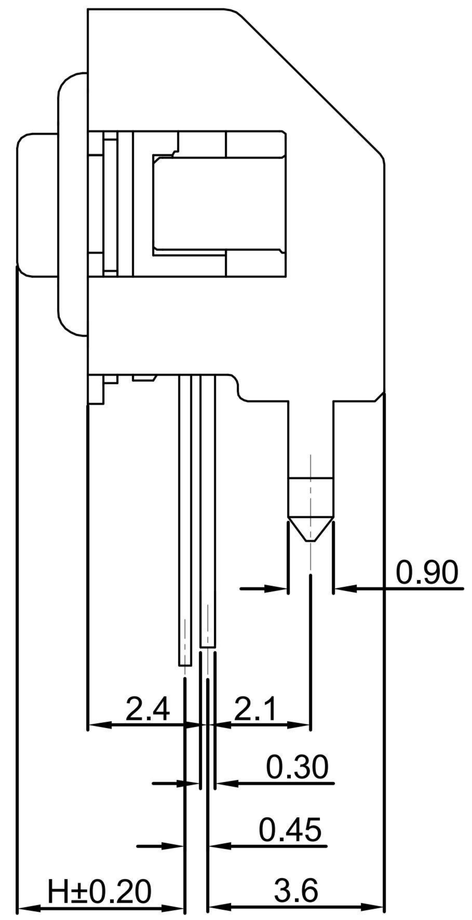

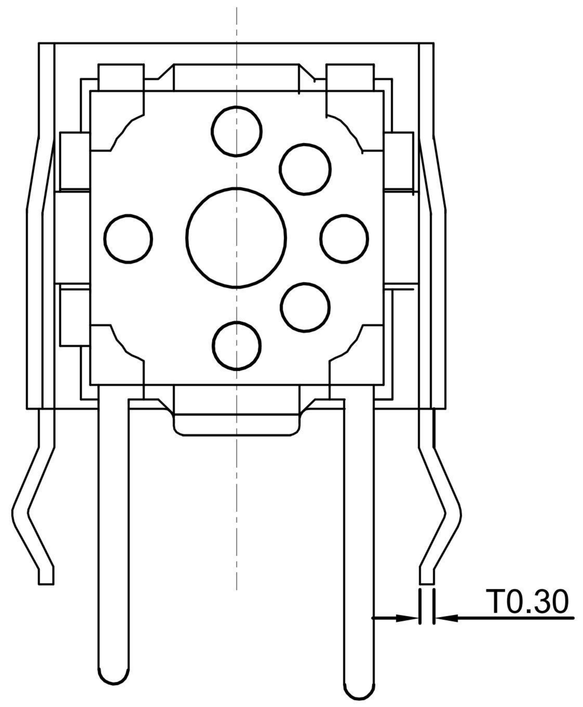

GT-TC158X-HXXXX-LX

Operating Force
A=160gf
B=260gf
C=100gf
D=230gf

Switch Height
H0325=3.25mm
H0375=3.75mm
H0575=5.75mm
H0875=8.75mm

Switch Lifetime (Force)
L1=100,000 Cycles

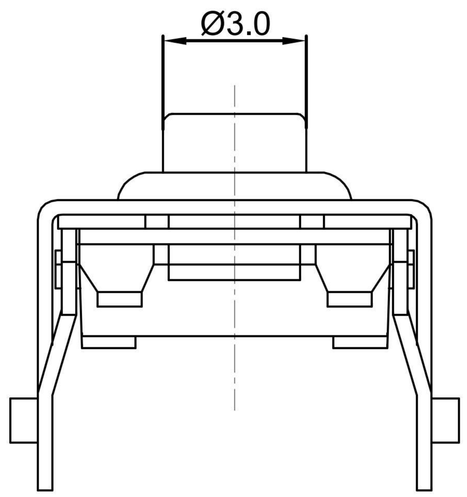

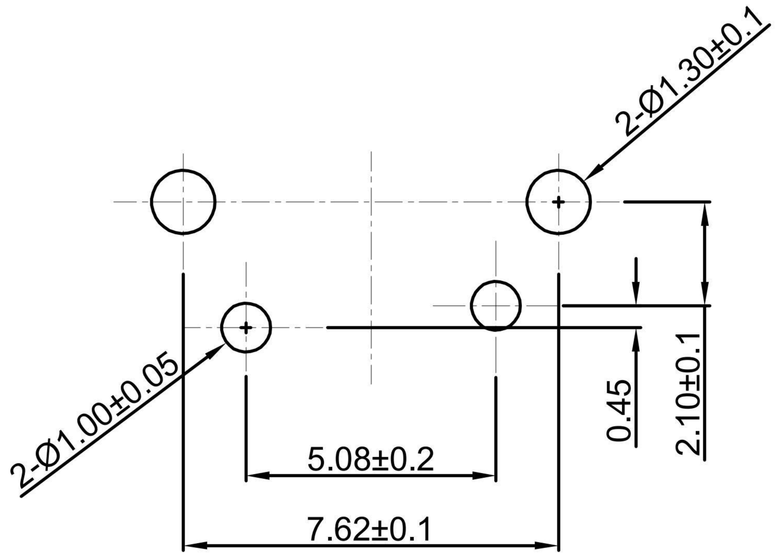

RECOMMENDED PCB LAYOUT

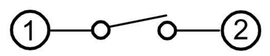

CIRCUIT DIAGRAM

G-Switch Specification:

1.Operating temperature range: -40°C ~ +85°C
2.Rating: 50mA.12V DC
3.Insulation resistance: 100MΩ min.100V DC
4.Dielectric strength: 250V AC for 1 min
5.Contact resistance:100m Ω max.
6.Travel: $0.30^{+0.1}_{-0.0}$mm
7.Waterproof grade: IPX7

Pb Process Capable | RoHS Compliant EU RoHS Standards | HALOGEN Compliant Halogen Free

SCALE:	UNIT: mm	Title:	Horizontal Tact Switch SMT 8.0×8.0×Hmm			品赞科技 b-Switch ®
SIZE: A4						
Unless otherwise General Tolerance:		Molde Code:	GT-TC158X-HXXXX-LX			
X. ±0.30		DRAWN	CHECKED	APPROVED	DATE	
X.x ±0.20						
X.xx ±0.15						
X.xxx ±0.10						
Angles ±3°		Xia	Chen	Chen	2023.02.01	REV: A0 / SHEET: 1/1