REV.	ECN NO OR DESCRIPTION	REVISED	DATE

Process Capable

RoHS Compliant 2011/65/EU

Compliant Halogen Free

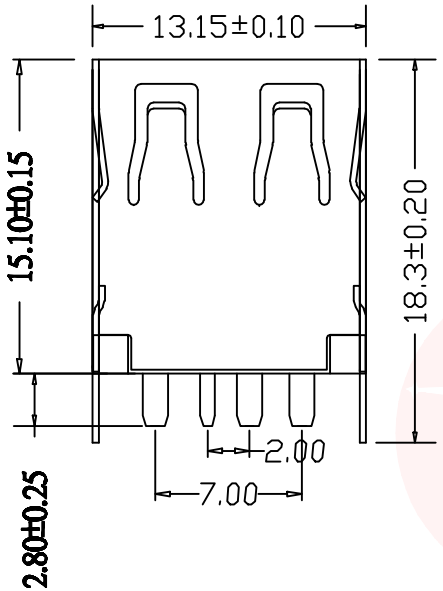

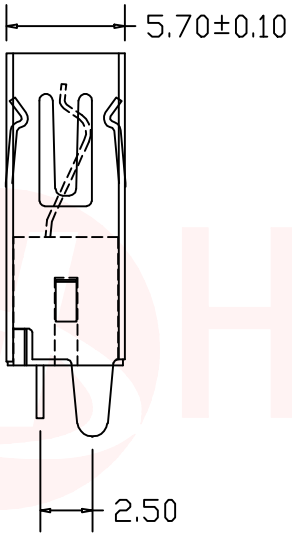

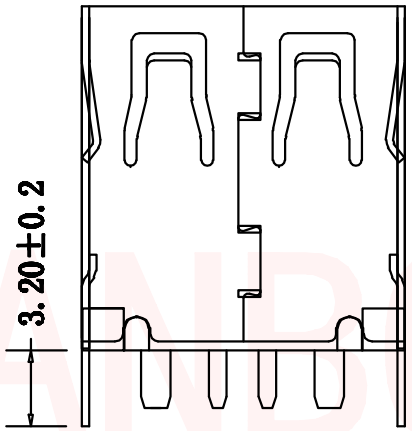

规格说明:Specifications:

电气特性:Electrical:

1.额定电流: Current Rating
3A/contact terminal

2.额定电压: Voltage Rating
30V DC

3.接触阻抗:Contact Resistance
30 milliohms MAX

4.耐电压:Dielectnic Withstanding Voitage:
500 V AC AT Sea Levol

5.绝缘阻抗:Lnsulation Resistance:
1000MEGA ohms MIN

物理性能:Mechanical:

1.插拔力: Cnnector Mate and Unmate Force
Mate force:3.57kgf(MAX)
Unmate force:1.02kgf(MIN)

2.端子保持力: Terminal Retenion
1.0kgf(MIN)

原材料:Matorial:

1.塑胶:Housing:
Hing Temperature Tnermaplastics,

2.端子:Contact:Copper Alloy C2680

3.外壳:Shell: Copper Alloy C2680/SPCC

电镀:Finish:

1.端子:Contact: Piated Gold in Mating Area
Tin On Solder Talls

端子四周镀30—50U"(MIN)锡,镀金区域镀金1U"

2.外壳:Shell:
四周镀(MIN)镍

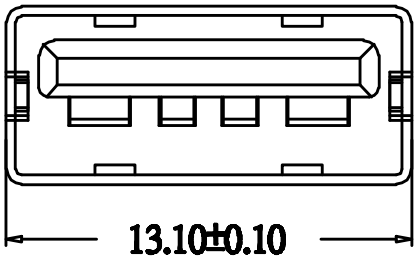

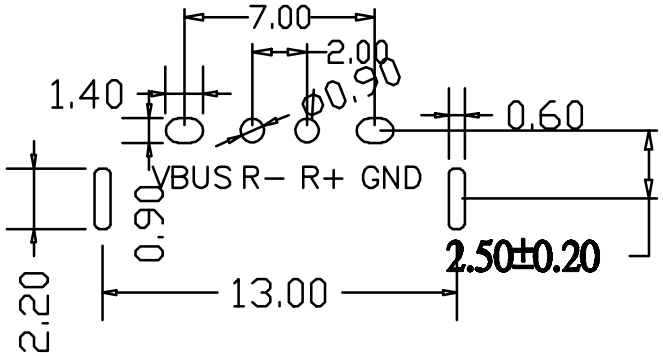

UNLESS OTHERWISE SPECIFED TOLERANCES

DECIMALS:		ANGLES:	
X	:±0.30	X	:±2°
X.X	:±0.20	X.X	:±1°
X.XX	:±0.10		

东莞市汉博电子科技有限公司
DONGGUAN HANBO TECHNOLOGY CO. , LTD

TITLE	USB 2.0 AF直插15.0直边直脚大电流			
DWN	xiong	PART NO. USB-UD250-BWS		
CHKD	lee	SCALE:1:1	UNIT: mm	
APVD	wang	SIZE: A4	SHEET:1OF 1	REV: A4

CUSTOMER COPY